JDS-Series Dimensions

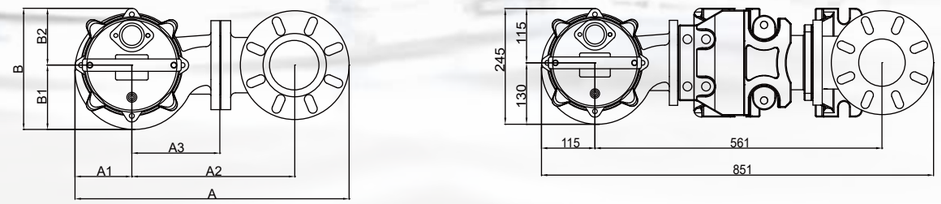

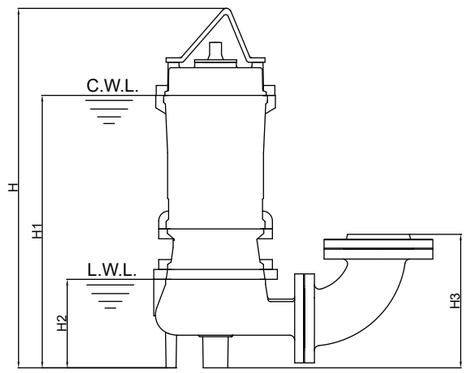

JDS-100~150

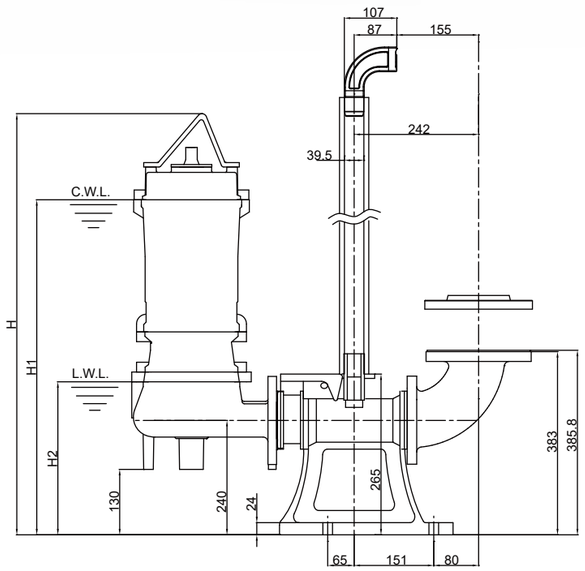

JDS-100~150 with QL-100 QDC

Dimensions (mm)											
Type	A	A1	A2	A3	B	B1	B2	H	H1	H2	H3
JDS-100	555	115	330	180	245	130	115	725	552	180	270
JDS-150	555	115	330	180	245	130	115	755	582	180	270

APEC PUMP ENTERPRISE CORP.
3F.,No.394,Sec.2 Mingzhi Rd.,Taishan Dist.,New Taipei City 243,Taiwan.
TEL: +886-2-29034567 **Fax:** +886-2-29064567

Vol.PUJDS10-2104-1K

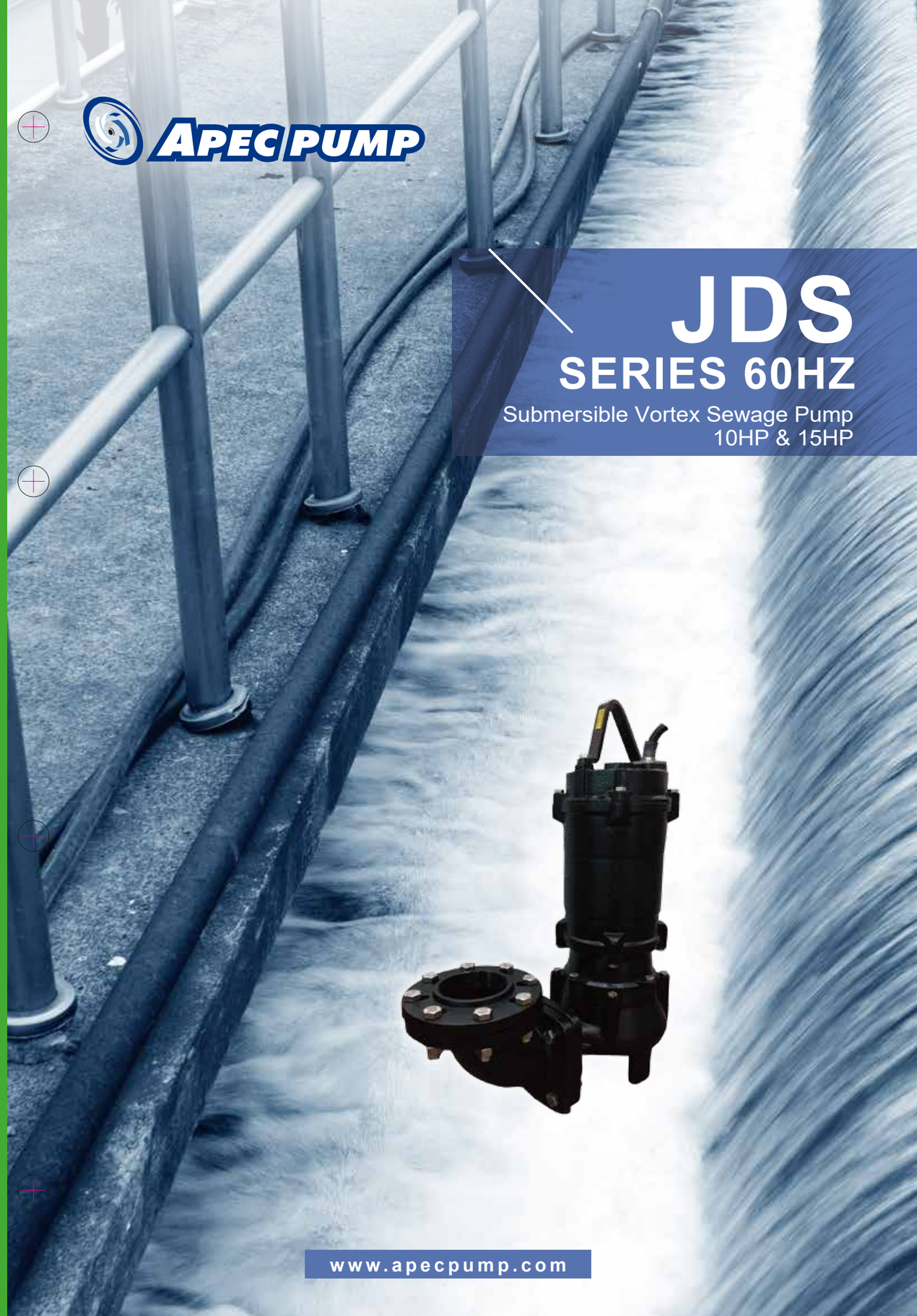

APEC PUMP

JDS
SERIES 60HZ

Submersible Vortex Sewage Pump
10HP & 15HP

www.apecpump.com

JDS
SERIES 60HZ

Submersible Vortex Sewage Pump

Feature

- / Vortex Impeller
- / Non-clogging
- / Double mechanical seal
- / Used for large volume pumping
- / High impeller efficiency

Application

- / Medium concentration wastewater
- / Heavy duty
- / Industrial
- / Storm water

Specifications

Liquid Temperature		0~40˚C (32~104˚F)
Submersible depth		10M
Motor Part	Frequency	60Hz
	Pole	2 Pole
	Type	Dry type
	Insulation	Class B
	Protection	IP 68
Pump Part	Protector	Auto-cut
	Bearing	Ball Type
	Mechanical seal	Double Mechanical Seal
	Impeller	Vortex

Performance Curve

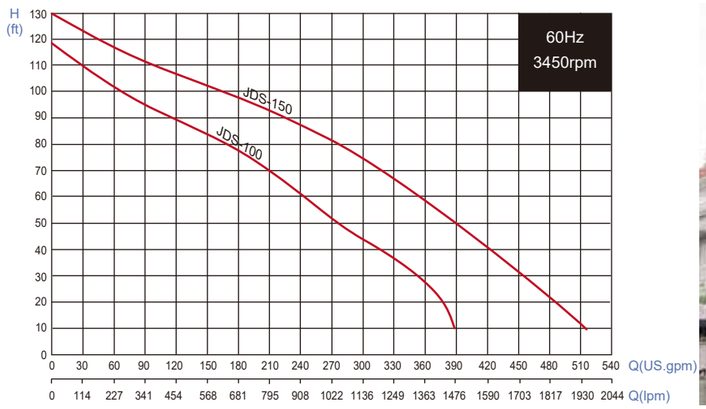

JDS-100

Vortex Impeller

Parts and Material List

No	Part	Material
1	Cable	H07RN-F / STOW
2	Handle	ASTM A36
3	Motor Cover	ASTM A48 Class 30
5	Motor Housing + Stator	ASTM A48 Class 30
6	Shaft with Rotor	AISI 410
7	Oil Chamber	ASTM A48 Class 30
8	Mechanical Seal	Upper: CA / CE
		Lower: SIC / SIC
9	Seal Housing	ASTM A48 Class 30
11	Impeller	ASTM A48 Class 30
12	Pump casing	ASTM A48 Class 30
13	Protector	KLIXON
15-1	Upper Bearing	NTN/TPI
15-2	Lower Bearing	NTN/TPI

Note:TPI is a family brand of NTN group.

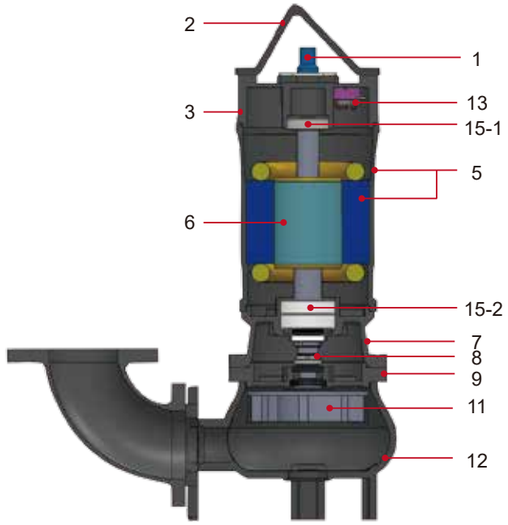

JDS-100+QL-100 QDC

Data Chart

Type	Output		Discharge	F.L.A.		Rated		Maximum		Free Passage	Weight(W/O Cable)	
	HP	kW	Inch	3ø 230V	3ø 460V	Head ft	Cap. gpm	Head ft	Cap. gpm	mm	1ø-kg	3ø-kg
JDS-100	10	7.5	4”	25A	12.5A	74	195	118	388	50	-	84.7
JDS-150	15	11	4”	33.5A	19A	82	265	130	515	50	-	94.7

» QL-100 Guide rail systems is optional for 10HP/15HP.