APEC Pump ENTERPRISE CORP.
3F.,No.394,Sec.2 Mingzhi Rd.,
Taishan Dist.,New Taipei City 243,Taiwan.
Tel : +886-2-29034567
Fax: +886-2-29064567
www.apecpump.com

Vol. PIAH-18091

ISO-9001

Horizontal Multistage Centrifugal Pumps
AHC/AHI , BHI/BHS

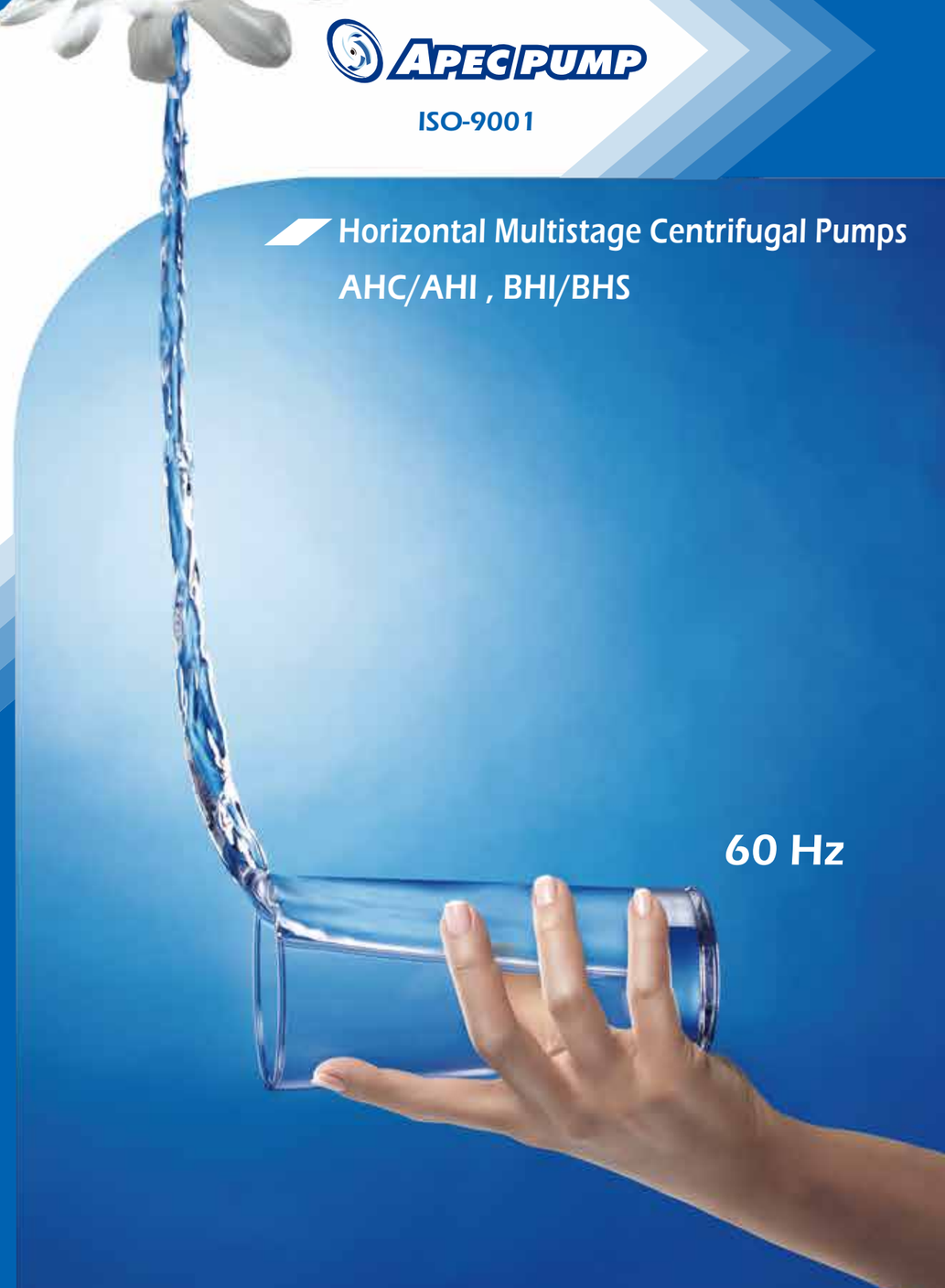

60 Hz

Pumps & Pumps

Index Horizontal Multistage Centrifugal Pumps

AHC/AHI , BHI/BHS (60HZ)

Index/Type Key — 02
AHC/AHI
General Data — 03
Performance Curve
AHC/I 2 — 05
AHC/I 4 — 06
AHC 8 — 07
AHC 12 — 08
Dimensions & Weights
AHC 2, 4 — 09
AHI 2, 4 — 10
AHC 8 — 11
AHC 12 — 12
BHI/BHS
General Data — 13
Performance Curve
BHI/S 2 — 15
BHI/S 4 — 16
BHI/S 8 — 17
BHI/S 12 — 18
Dimensions & Weights
BHI/S 2, 4 — 19
BHI/S 8, 12 — 20
Installation
Operating Manual — 21
Nameplate — 23

Type Key

AHC 2-20

Pump Type
H : Horizontal

Pump material
C : Cast iron (Discharge & Suction)
I : Stainless steel 304
BI : Stainless steel 304
BS : Stainless Steel 316

Delivery (m^3/h)
2 : 2 m^3/h
4 : 4 m^3/h
8 : 8 m^3/h
12 : 12 m^3/h

Stages times 10
20: 2 stages
30: 3 stages
40: 4 stages
50: 5 stages
60: 6 stages
(The stages are not applicable to 8,12)

Horizontal Centrifugal Multistage Pumps AHC AHI 60HZ

AHC 60Hz

AHI 60Hz

Feature:

Reliability/Compact Form/Wide Range
High Efficiency / Easy Maintenance

Application:

Domestic/ Light industry and farming
Pressure boosting/Air-conditioning systems
Cooling systems or cooling machine

Performance Range

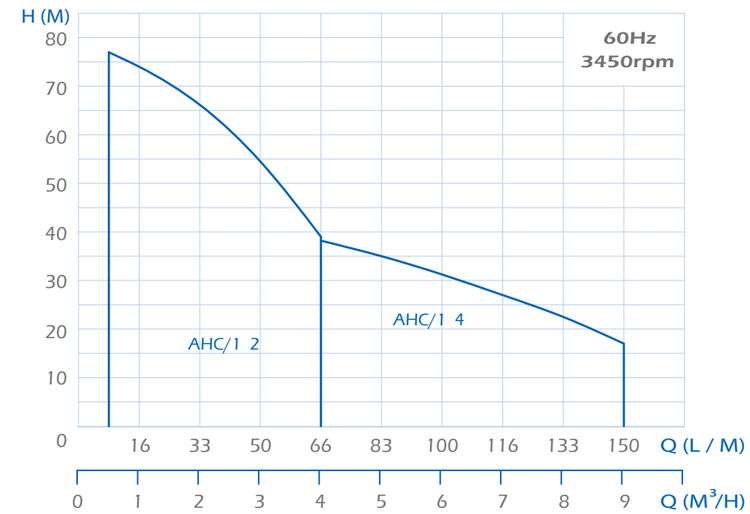

Pump

The AHC and AHI series are non-self priming, horizontal multistage centrifugal pumps. Pump is coupled with motor at the same shaft and mounted on a base-plate. The friendly design makes the pump suitable for installation in the small domestic or industrial water supply systems. The pump is fitted with a mechanical seal and through-going pump-motor shaft.

AHC: The discharge and suction chamber are made of cast iron. The other parts of pump in contact with the liquid are made of stainless steel.

AHI: All parts of pump in contact with the liquid are made of stainless steel.

EPDM O-rings is standard. Viton for option.

Motor

The pump is fitted with a totally enclosed, fan-cooled, squirrel-cage motor.

Rated speed: 3450rpm/60Hz
Enclosure Class: IP 54
Insulation Class: F
Standard Voltages: 1x110/220V(0.5~1.0HP)
1x220~240V(1.5~3.0HP)
3x220~255 Δ/380~440Y V(0.5~1.5HP)
3x220~277 Δ/380~480Y V(2.0~4.0HP)

Operating conditions

Liquid: Clean liquid without solid particles.
Liquid temperature range: 0˚C~+90˚C
Maximum ambient temperature: +50˚C

The maximum operating pressure depends on the temperature of the pumped liquid, see table:

Max. operating pressure	10 kg/cm²	6 kg/cm²
AHC/AHI-2M, 4M	0˚C~+40˚C	+41˚C~+90˚C
AHC-8M, 12M	0˚C~+55˚C	+56˚C~+90˚ C

Min. inlet pressure: According to the NPSH curve + a safety margin of 0.5m.
Max. inlet pressure: Limited by the max. operating pressure.

Pipe connections

Connections	AHC/I 2	AHC/I 4	AHC 8	AHC 12
Suction port	1″	1 1/4″	1 1/2″	1 1/2″
Discharge port	1″	1″	1 1/4″	1 1/2″
Drain hole, priming hole:	3/8″	3/8″	1/2″	1/2″

Mechanical seals

List of Materials	
Q:	Silicon carbide
B:	Carbon
U:	Tungsten carbide
E:	EPDM
V:	Viton
C:	Seal Type (general use)
A:	Seal Type (machine tool use)

* Spring is SS316.

Mechanical Seals	AHC/AHI
CQB	•
CQQ	Optional
AUU	Optional
O-rings	
E	•
V	Optional

• Standard

All technical information is subject to change without notice.

Construction & Material

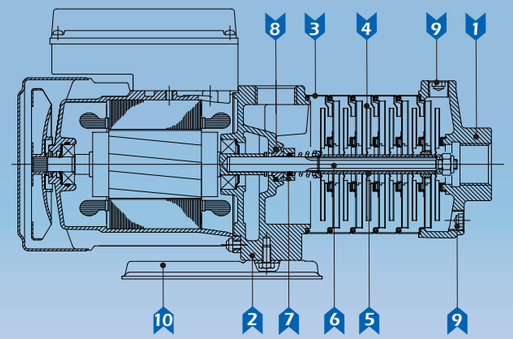

AHC/I 2 , 4

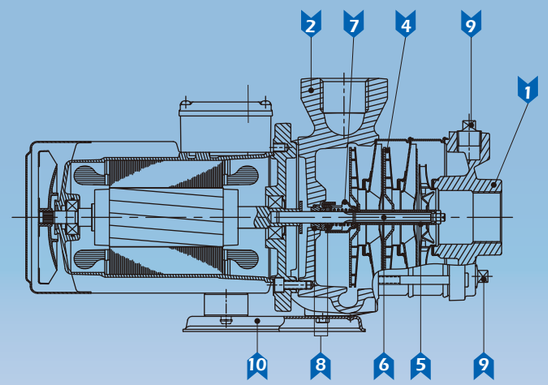

AHC 8 , 12

No.	Description	Materials AHC	Materials AHI
1	Suction chamber	Cast iron	SS304
2	Pump head	Cast iron	SS304
3	Intermediate chamber	SS304	SS304
4	Impeller	SS304	SS304
5	Spacing pipe	SS304	SS304
6	Shaft	SS431	SS431
7	Mechanical seal	Silicon carbide/Carbon	Silicon carbide/Carbon
8	O-ring	EPDM	EPDM
9	Drain and priming plug	Steel	SS304
10	Base plate	Steel	SS304

Horizontal Centrifugal Multistage Pumps

Performance Curve

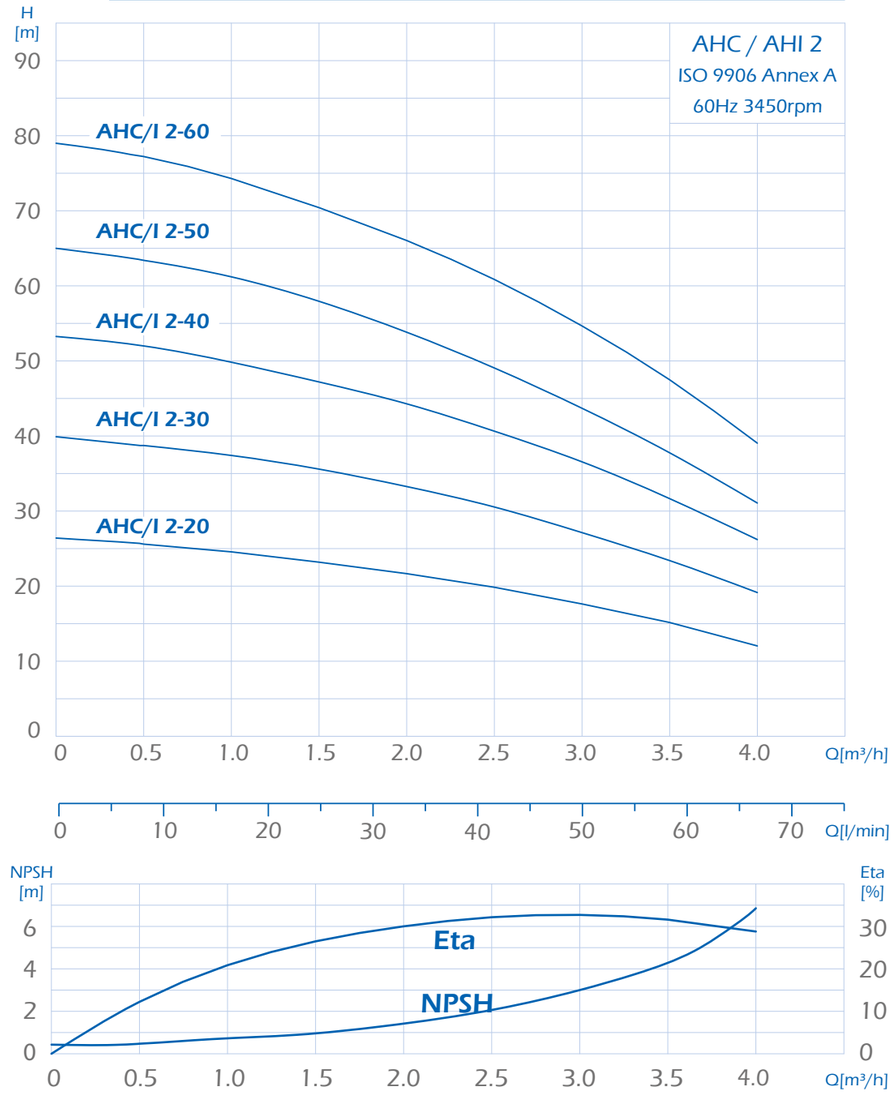

Electrical data, 3450 min⁻¹

Pump type	1 X 110-220 V			3 X 220-255 △ / 380-440 Y V		
	HP	P1(W)	I 1/1(A)	HP	P1(W)	I 1/1(A)
AHC/AHI 2-20	0.5	570	6.3/3.2	0.5	550	1.8-1.9/1.0-1.1
AHC/AHI 2-30	0.5	780	7.9/4.1	0.5	680	3.5-3.3/2.0-1.9
AHC/AHI 2-40	0.75	870	8.8/4.4	0.75	950	3.1-3.2/1.8-1.9
AHC/AHI 2-50	1	1190	11.7/5.9	1	1160	3.7-3.8/2.1-2.2
AHC/AHI 2-60	1	1410	13.7/6.9	1	1280	3.7-3.8/6.4-6.6

All technical information is subject to change without notice.

Horizontal Centrifugal Multistage Pumps

Performance Curve

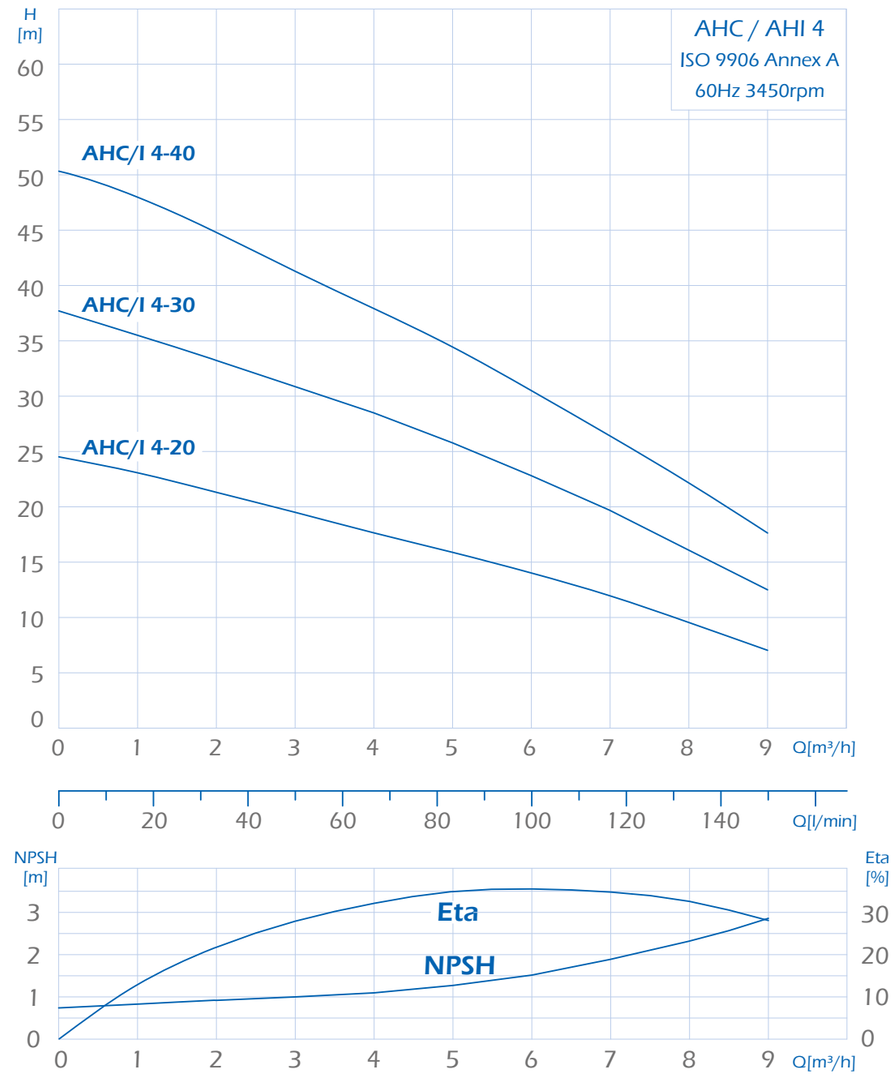

Electrical data, 3450 min⁻¹

Pump type	1 X 110-220 V			3 X 220-255 △ / 380-440 Y V		
	HP	P1(W)	I 1/1(A)	HP	P1(W)	I 1/1(A)
AHC/AHI 4-20	0.75	950	9.5/4.7	0.5	890	2.85-3.0/1.65-1.8
AHC/AHI 4-30	1.0	1310	12.5/6.2	1.0	1250	3.9-4.0/2.3-2.4
AHC/AHI 4-40	1.5	1700	8.3(220V)	1.5	1630	5.1-5.3/2.9-3.1

Horizontal Centrifugal Multistage Pumps

Performance Curve

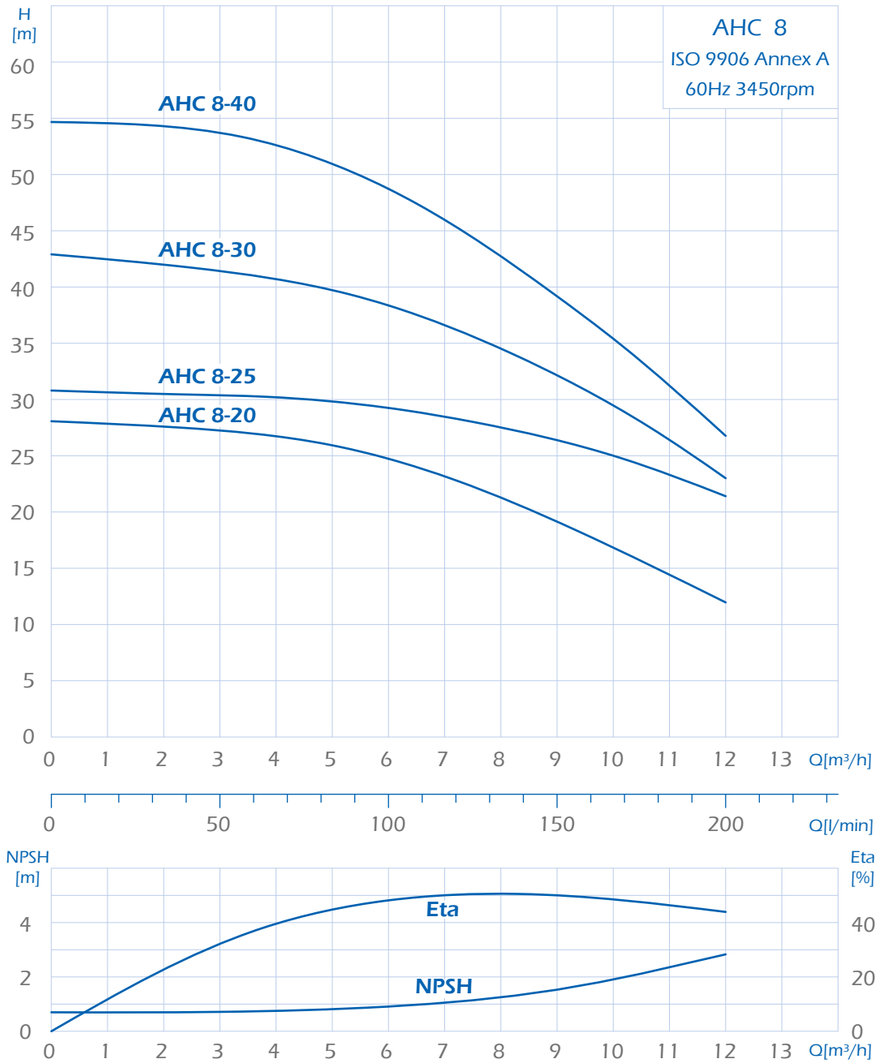

Pump type	1 X 110/220 V			3 X 200-255△/380-440 V		
	P2(HP)	P1(W)	I 1/1(A)	P2(HP)	P1(W)	I 1/1(A)
AHC 8-20	1	1250	11.7/5.9	1	1220	3.7-3.8/2.2-2.3
AHC 8-25	–	–	–	1.5	1620	4.8-5.0/2.8-2.9
AHC 8-30	2	1830	8.9 (220V)	1.5	1860	5.7-5.5/3.3-3.2
				3 X 200-277△/380-480 V		
AHC 8-40	2	2080	10.4 (220V)	2	2340	6.4-5.9/3.7-3.4

Electrical data, 3450 min-1

All technical information is subject to change without notice.

Horizontal Centrifugal Multistage Pumps

Performance Curve

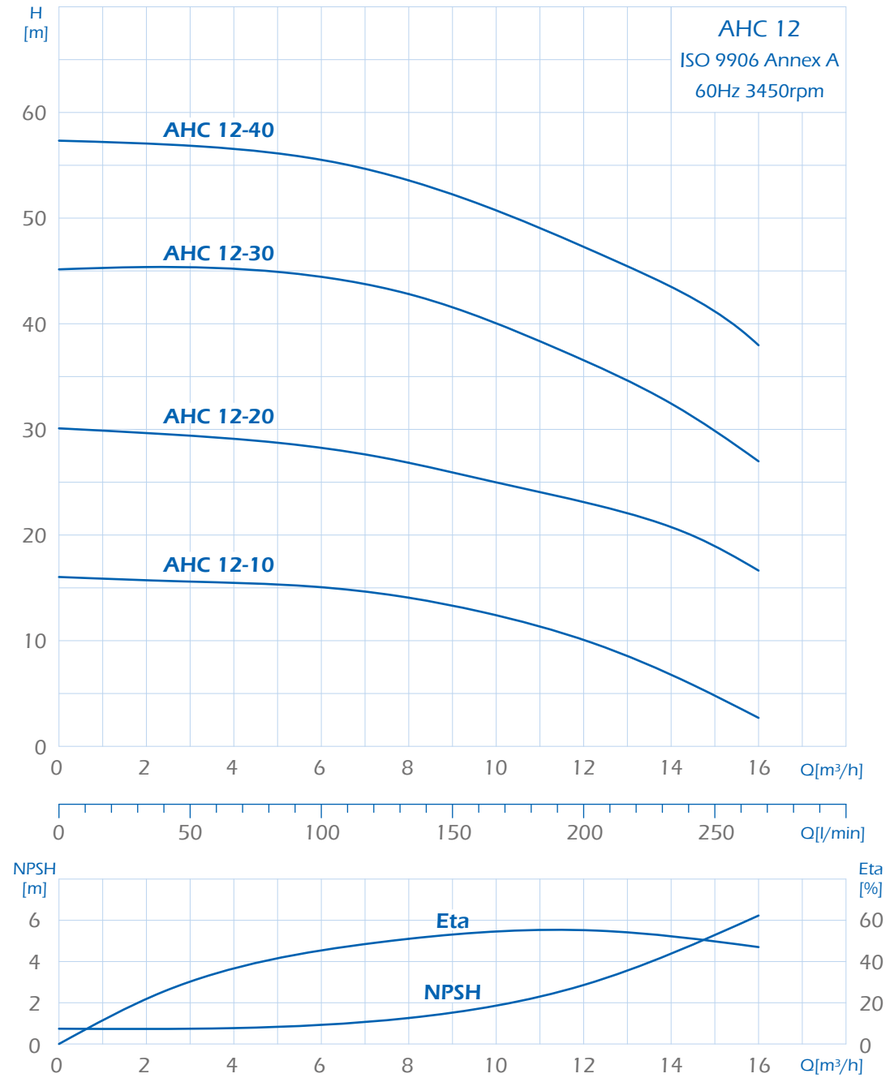

Pump type	1 X 110/220 V			3 X 200-255△/380-440 V		
	P2(HP)	P1(W)	I 1/1(A)	P2(HP)	P1(W)	I 1/1(A)
AHC 12-10	–	–	–	1	910	3.5-3.7/2.0-2.1
AHC 12-20	2	2120	9.4(220V)	1.5	1960	6.0-5.9/3.5-3.4
		–		3 X 200-255△/380-480 V		
AHC 12-30	–	–	–	3	2940	8.8-10.2/5.1-5.91
AHC 12-40	–		–	4	3810	1.2-11.3/6.5-6.6

Electrical data, 3450 min-1

Horizontal Centrifugal Multistage Pumps

AHC 2 , 4

Dimensions & Weights

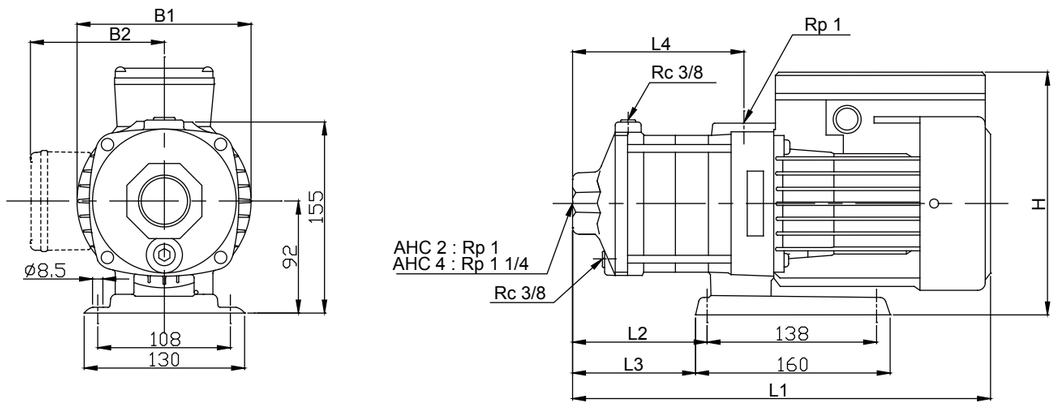

AHC 2,4

Pump type	Dimension (mm)									Net weight (kg)	
						B2		H			
	L1	L2	L3	L4	B1	1phase	3phase	1phase	3phase	1phase	3phase
AHC 2-20	309	75	63	101	141	127	115	228	207	10.3	10.0
AHC 2-30	327	93	81	119	141	127	115	228	207	11.1	10.8
AHC 2-40	345	111	99	137	141	127	115	228	207	11.3	11.1
AHC 2-50	403	129	117	155	141	127	115	228	207	13	12.4
AHC 2-60	421	147	135	173	141	127	115	228	207	13.2	12.7
AHC 4-20	318	84	72	110	141	127	115	228	207	12.2	10.7
AHC 4-30	384	111	99	137	141	127	115	228	207	12.7	12.3
AHC 4-40	412	138	126	164	141	127	115	228	207	14	13.7

All technical information is subject to change without notice.

Horizontal Centrifugal Multistage Pumps

AHI 2 , 4

Dimensions & Weights

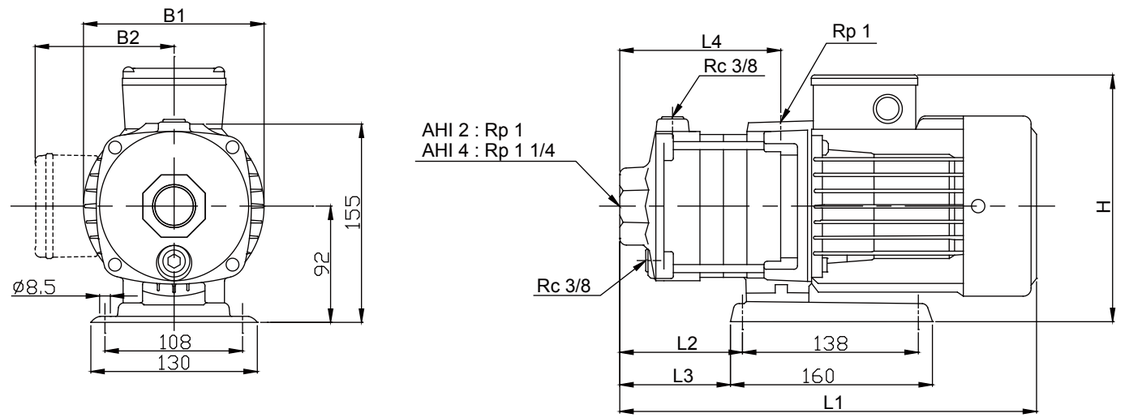

AHI 2,4

Pump type	Dimension (mm)									Net weight (kg)	
						B2		H			
	L1	L2	L3	L4	B1	1phase	3phase	1phase	3phase	1phase	3phase
AHI 2-20	309	75	63	101	141	127	115	228	207	9.1	8.8
AHI 2-30	327	93	81	119	141	127	115	228	207	10.0	9.6
AHI 2-40	345	111	99	137	141	127	115	228	207	10.2	10.0
AHI 2-50	403	129	117	155	141	127	115	228	207	11.8	11.5
AHI 2-60	421	147	135	173	141	127	115	228	207	12.1	11.7
AHI 4-20	318	84	72	110	141	127	115	228	207	9.8	9.5
AHI 4-30	384	111	99	137	141	127	115	228	207	11.5	11.1
AHI 4-40	412	138	126	164	141	127	115	228	207	12.8	12.6

AHC 8

Dimensions & Weights

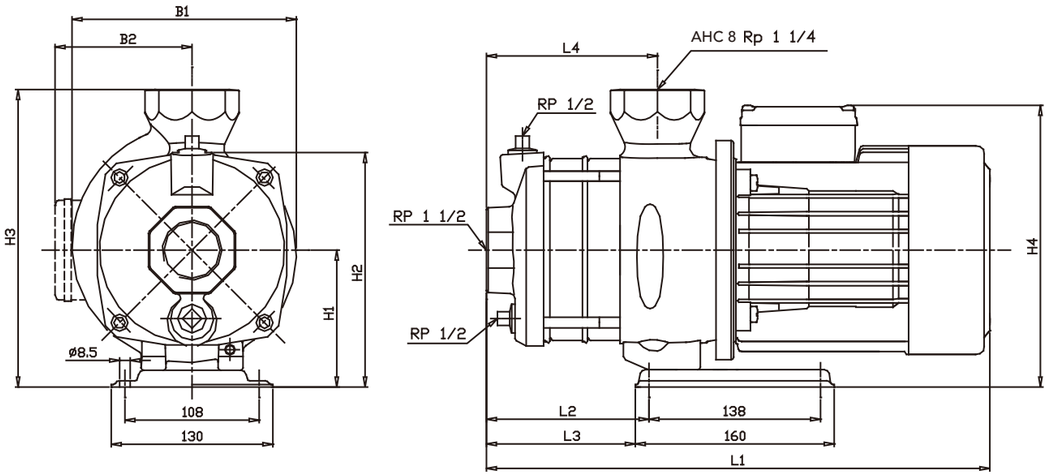

AHC 8-1Phase

Pump type	Dimension (mm)										Fig.	Net weight (kg)
	L1	L2	L3	L4	B1	B2	H1	H2	H3	H4		
AHC 8-20	360	54	41	77	181	135	110	187	239	248	1	18.6
AHC 8-25	–	–	–	107	–	–	110	187	239	–	–	–
AHC 8-30	450	132	81	107	185	152	110	187	239	268	2	26.6
AHC 8-40	450	132	81	107	185	152	110	187	239	268	2	26.8

AHC 8-3Phase

Pump type	Dimension (mm)										Fig.	Net weight (kg)
	L1	L2	L3	L4	B1	B2	H1	H2	H3	H4		
AHC 8-20	360	54	41	77	181	114	110	187	239	224	1	18.4
AHC 8-25	390	84	71	107	181	114	110	187	239	224	1	20.3
AHC 8-30	390	84	71	107	181	114	110	187	239	224	1	20.4
AHC 8-40	450	132	81	107	185	139	110	187	239	249	2	26.8

All technical information is subject to change without notice.

Horizontal Centrifugal Multistage Pumps

AHC 12

Dimensions & Weights

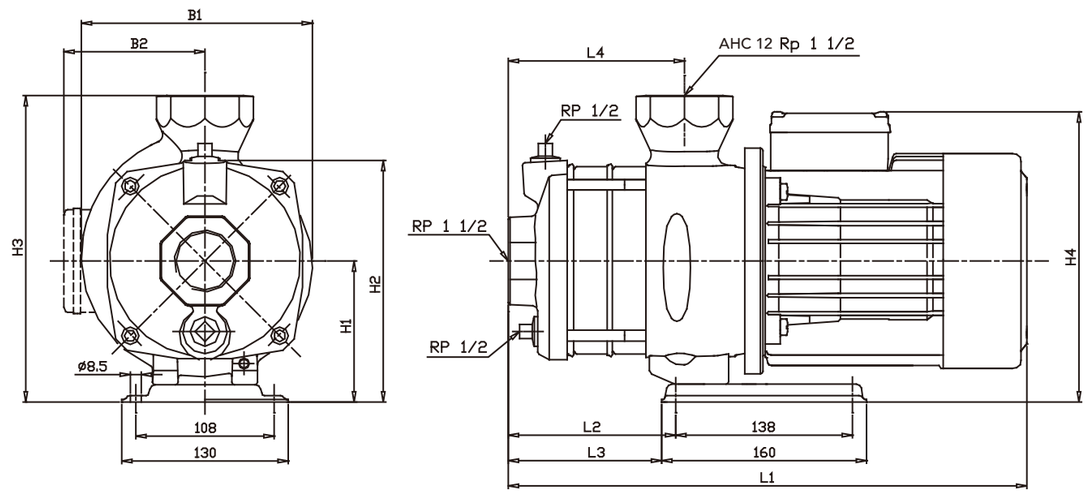

AHC 12-1Phase

Pump type	Dimension (mm)										Fig.	Net weight (kg)
	L1	L2	L3	L4	B1	B2	H1	H2	H3	H4		
AHC 12-10	–	-	-	77	–	–	110	187	239	–	–	–
AHC 12-20	420	102	51	77	185	152	110	187	239	262	2	25.8
AHC 12-30	–	-	-	107	–	–	110	187	239	–	–	–
AHC 12-40	–	-	-	107	–	–	122	199	251	–	–	–

AHC 12-1Phase

Pump type	Dimension (mm)										Fig.	Net weight (kg)
	L1	L2	L3	L4	B1	B2	H1	H2	H3	H4		
AHC 12-10	360	54	41	77	181	114	110	187	239	224	1	16.2
AHC 12-20	360	54	41	77	181	114	110	187	239	224	1	19.1
AHC 12-30	450	132	81	107	185	139	110	187	239	249	2	28.9
AHC 12-40	471	132	81	107	196	150	122	199	251	272	2	34.2

Horizontal Centrifugal Multistage Pumps BHI BHS 60HZ

Feature

Reliability / Compact form / Wide range / High efficiency / Easy maintenance / Suitable for slightly corrosive liquids

Application

> Water supply and pressure boosting
> Air-conditioning
> Water treatment
> Heating and cooling in industrial processes
> Industrial washing and dish-washing machines
> Softened water
> Pressure boosting of process water
> Fertilizer / dosing systems

Performance Range

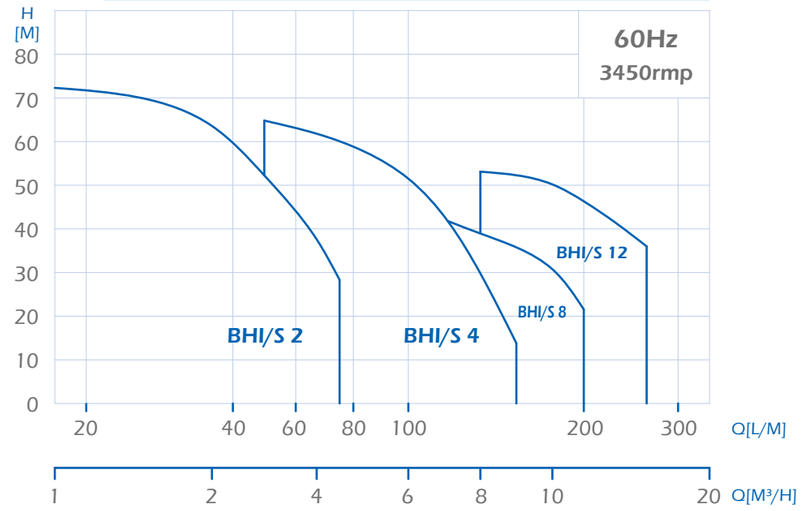

BHI 60Hz BHS 60Hz

Pump

A horizontal, multistage centrifugal pump is made of stainless steel. The pump is a non-self priming type and fitted with a mechanical shaft seal.

Motor

Totally enclosed, fan-cooled standard motor.

Rated speed: 3450rpm/60Hz
Enclosure Class: IP 54
Insulation Class: F
Standard Voltages: 1x110~220V, 60Hz,
3x200~230Δ/346-400Y V, 60Hz

Operating conditions

Liquid temperature range: 0 °C ~+110 °C
Maximum ambient temperature: +40 °C
Maximum operating pressure: 10 kg/cm²
Maximum inlet pressure is limited by maximum operating pressure.

Mechanical Seals

List of Materials	
Q:	Silicon carbide
B:	Carbon
E:	EPDM
V:	Viton
R:	Seal Type (general use)

*Spring is SS316.

Mechanical Seals	BHI	BHS
RQQ	Optional	•
RQB	•	Optional
O-rings		
E	•	•
V	Optional	Optional

• Standard

Liquids to be pumped

These pumps are designed for pumping freely flowing non-corrosive, non-explosive, and non-flammable liquids. The liquids to be pumped must also be free of solid matter, sands, fibers, and similar materials.

Most common non-highly corrosive watery liquids, oily liquids, hot and cold liquids can be pumped with these pumps.

The suitability of these pumps for pumping any particular liquid depends upon a number of factors, such as the ph value, contents of chemicals such as chlorides, oils, the temperature of the liquids, etc..

Pipe connections

Connections	BHI/S 2	BHI/S 4
Suction port	1″	1 1/4″
Discharge port	1″	1 1/4″
Drain hole, priming hole:	3/8″	3/8″

Construction & Material

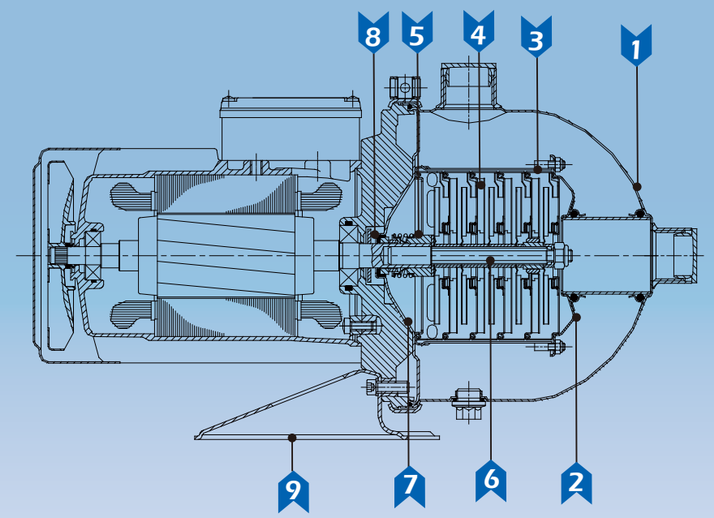

Materials

No.	Description	BHI	BHS
1	Pump casing	SS304	SS316
2	Suction inter-connector	SS304	SS316
3	Chamber	SS304	SS316
4	Impeller	SS304	SS316
5	Cover plate	SS304	SS316
6	Shaft	SS431	SS316
7	Mechanical seal	Silicon carbide/Carbon	Silicon carbide/Silicon carbide
8	O-ring	EPDM	EPDM
9	Base plate	Steel	Steel

All technical information is subject to change without notice.

Horizontal Centrifugal Multistage Pumps

Performance Curve

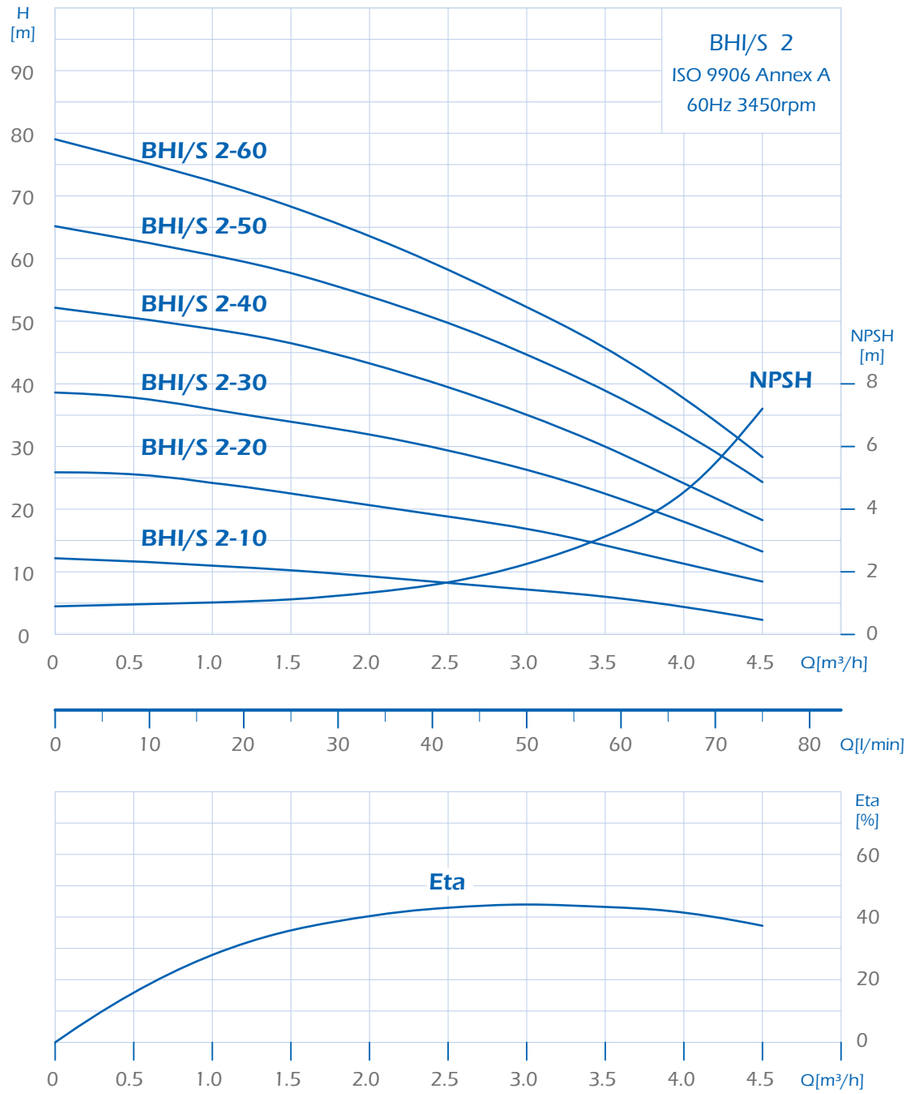

Pump type	Electrical data, 3450 min-1					
	1 X110-220 V			3 X 220-255△/380-440Y V		
	HP	P1(W)	I 1/1(A)	HP	P1(W)	I 1/1(A)
BHI/BHS 2-10	0.5	390	5.9/3.0	0.5	360	1.5-1.6/0.9-1.0
BHI/BHS 2-20	0.5	570	6.6/3.4	0.5	540	1.7-1.8/1.0-1.1
BHI/BHS 2-30	0.5	750	7.6/3.8	0.5	720	2.2-2.3/1.3-1.4
BHI/BHS 2-40	0.75	980	9.3/4.7	0.75	950	3.0-3.2/1.75-1.9
BHI/BHS 2-50	1	1160	10.7/5.4	1	1170	3.8-3.9/2.2-2.3
BHI/BHS 2-60	1	1375	12.4/6.3	1	1330	4.1-4.2/2.35-2.45

All technical information is subject to change without notice.

Horizontal Centrifugal Multistage Pumps

Performance Curve

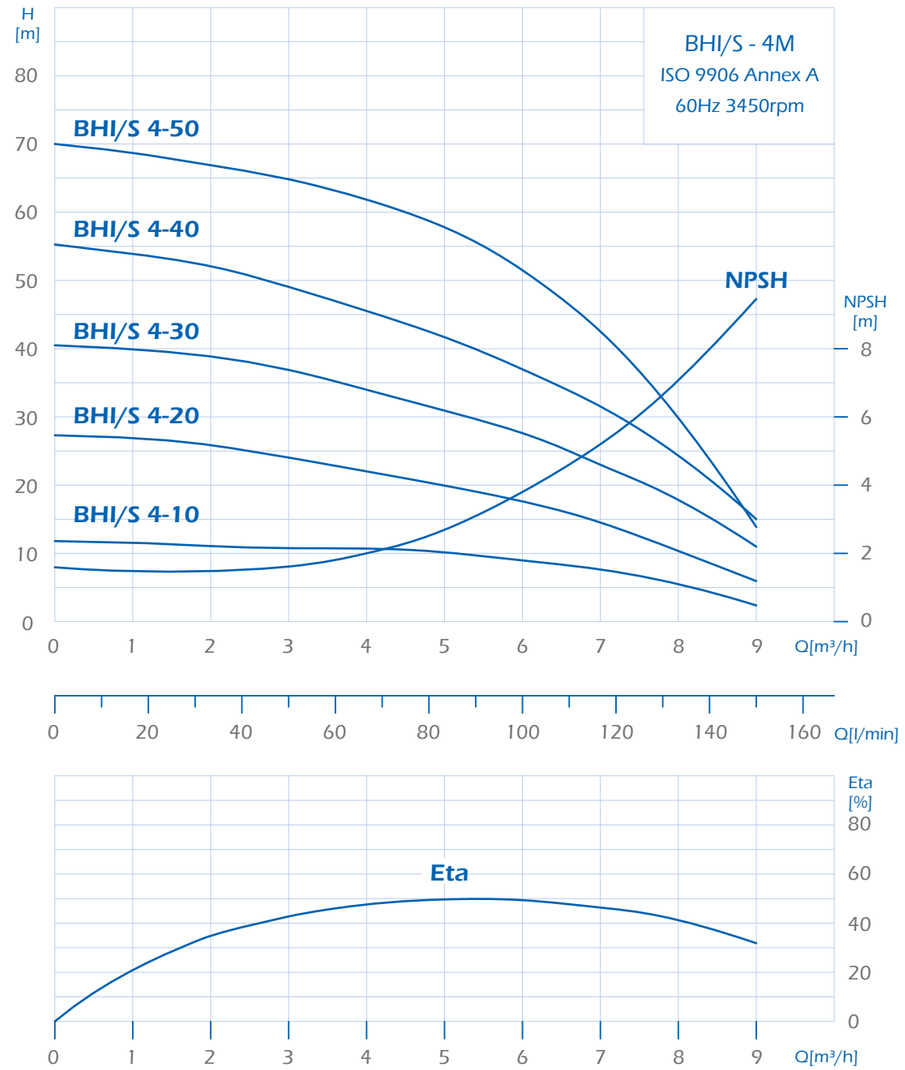

Pump type	Electrical data, 3450 min-1					
	1 X 110-220 V			3 X 220-255△/380-40Y V		
	HP	P1(W)	I 1/1(A)	HP	P1(W)	I 1/1(A)
BHI/BHS 4-10	0.5	530	5.9/3.1	0.5	560	1.8-1.9/1.1-1.2
BHI/BHS 4-20	0.75	970	9.3/4.7	0.75	910	2.9-3.1/1.7-1.8
BHI/BHS 4-30	1	1360	12.5/6.5	1	1280	4.1-4.2/2.4-2.5
BHI/BHS 4-40	1.5	1730	8.5(220V)	1.5	1675	4.7-4.8/2.7-2.8
BHI/BHS 4-50	1.5	2080	9.9(220V)	1.5	1995	5.7-6.0/3.3-3.5

Horizontal Centrifugal Multistage Pumps

Performance Curve

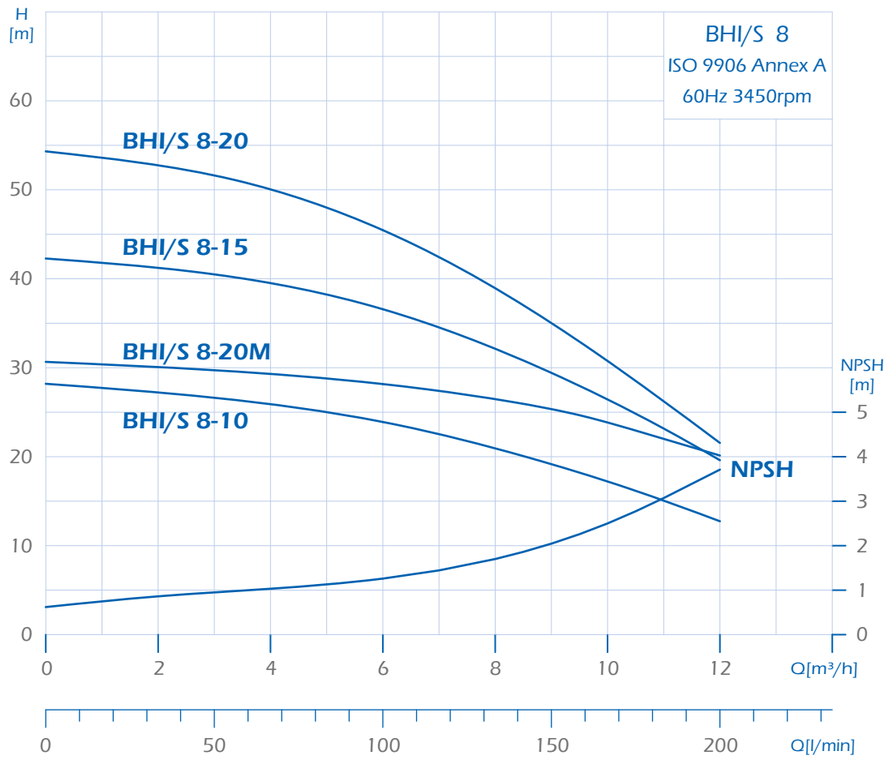

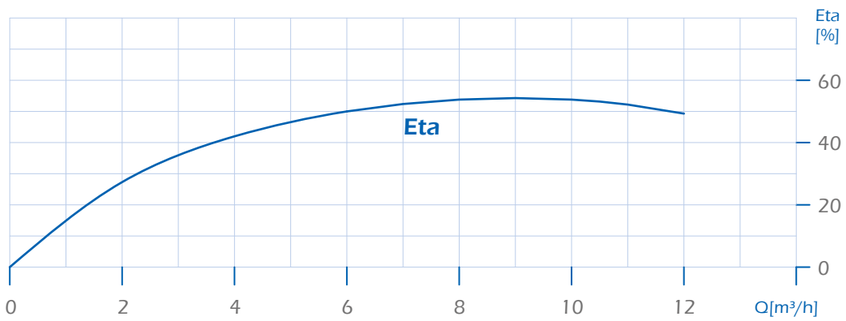

Pump type	1 X110-220 V			3 X 220-255△/380-440Y V		
	P2(HP)	P1(W)	I 1/1(A)	P2(HP)	P1(W)	I 1/1(A)
BHI/BHS 8-10	1	1280	11.4/6.0	1	1210	3.9-4.1/2.3-2.4
BHI/BHS 8-20M	1.5	1730	8.3(220V)	1.5	1670	5.2-5.3/3.0-3.1
BHI/BHS 8-15	2	2080	9.3(220V)	2	1890	5.6-5.7/3.2-3.3
				3 X 220-277△/380-480Y V		
BHI/BHS 8-20	2	2460	10.9(220V)	2	2360	7.1-6.9/4.1-4.0

Electrical data, 3450 min-1

All technical information is subject to change without notice.

Horizontal Centrifugal Multistage Pumps

Performance Curve

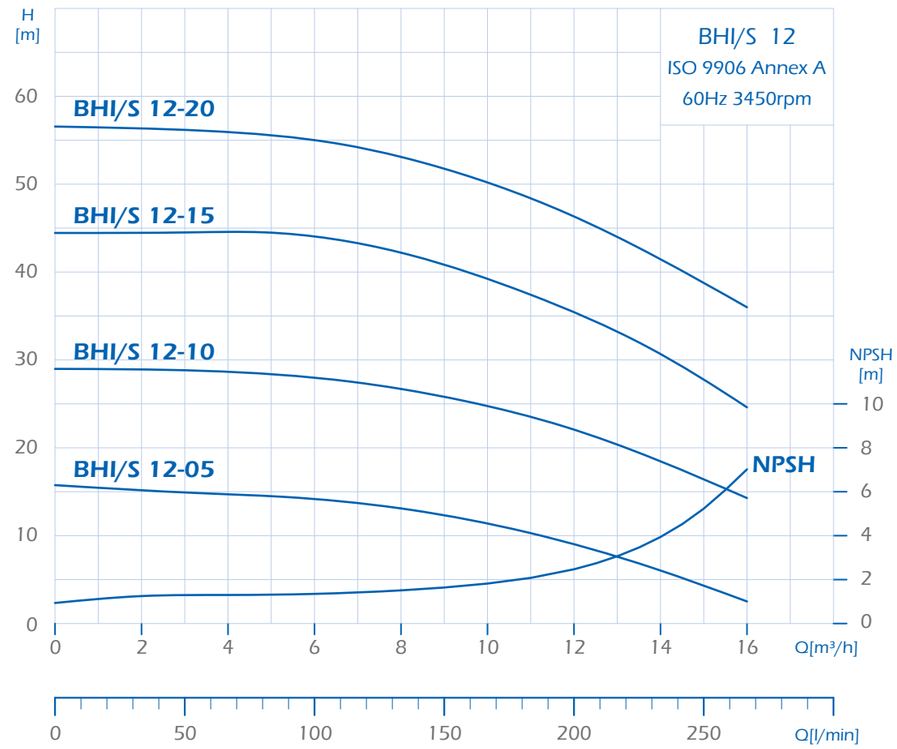

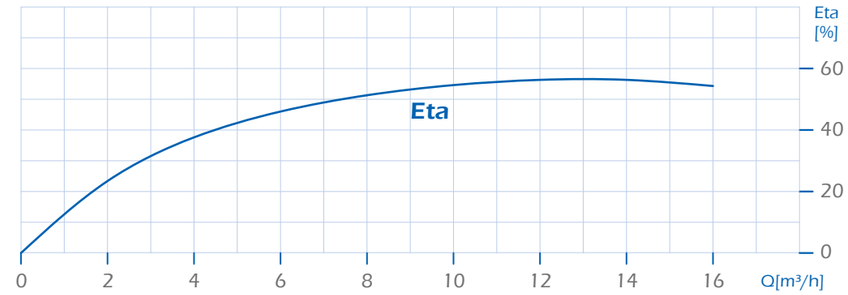

Pump type	1 X 110-220 V			3 X 220-255△/380-440Y V		
	P2(HP)	P1(W)	I 1/1(A)	P2(HP)	P1(W)	I 1/1(A)
BHI/BHS 12-05	0.75	940	8.5/4.5	0.75	850	2.8-3.0/1.6-1.75
BHI/BHS 12-10	2.0	2170	9.7(220V)	1.5	1930	5.7-5.9/3.3-3.4
				3 X 220-277△/380-480Y V		
BHI/BHS 12-15	–	–	–	3.0	2860	9.2-8.9/5.3-5.1
BHI/BHS 12-20	–	–	–	4	3950	11.2-11.8/6.5-6.8

Electrical data, 3450 min-1

A-Series
Horizontal Centrifugal Multistage Pumps

BHI/BHS - 2M , 4M
Dimensions & Weights

BHI/BHS - 2M

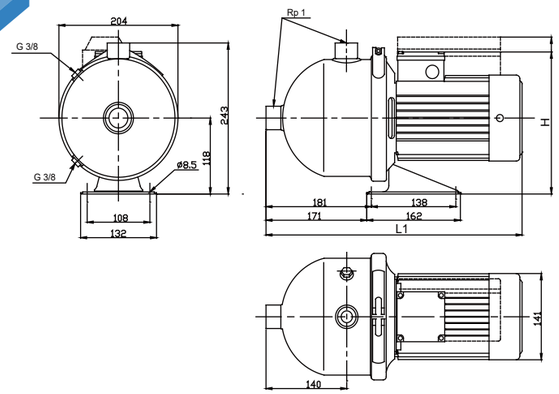

BHI/BHS - 4M

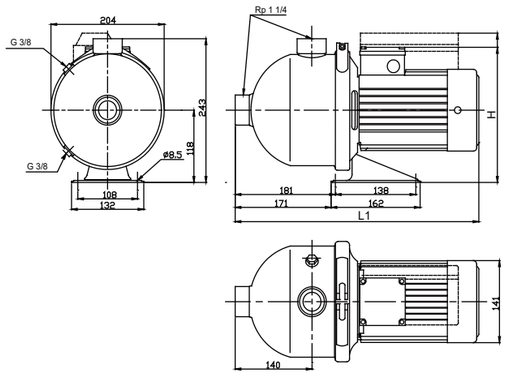

Pump type	Dimension (mm)				Net Weight
	1phase		3phase		
	L1	H	L1	H	kg
BHI/BHS-2M10	403	255	403	233	9.5
BHI/BHS-2M20	403	255	403	233	9.5
BHI/BHS-2M30	403	255	403	233	9.8
BHI/BHS-2M40	403	255	403	233	10.3
BHI/BHS-2M50	441	255	441	233	11.7
BHI/BHS-2M60	441	255	441	233	12.0
BHI/BHS-4M10	403	255	403	233	9.5
BHI/BHS-4M20	403	255	403	233	9.5
BHI/BHS-4M30	403	255	403	233	10.1
BHI/BHS-4M40	441	255	441	233	11.5
BHI/BHS-4M50	441	255	441	233	12.8

BHI/BHS-2M, 4M

All technical information is subject to change without notice.

A-Series
Horizontal Centrifugal Multistage Pumps

BHI/BHS - 8M , 12M
Dimensions & Weights

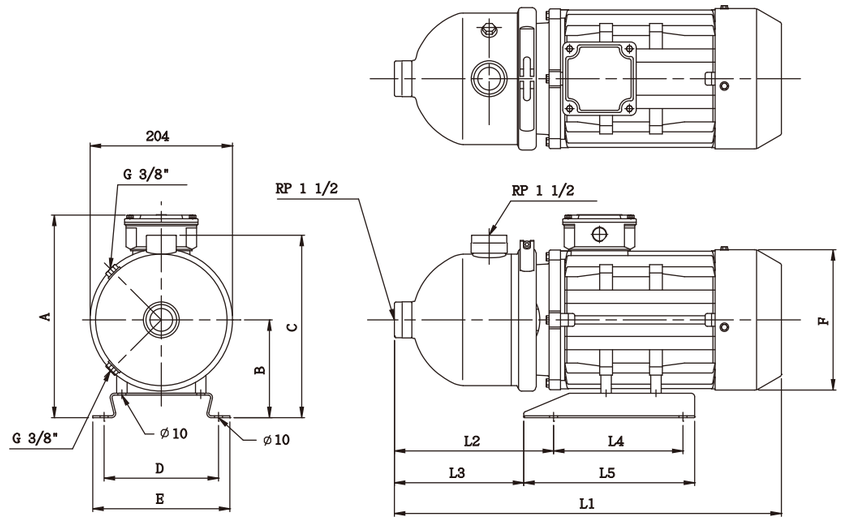

BHI/BHS-8M, 12M

Pump type	Motor		Dimension (mm)													Net Weight(kg)	
	P_2		L1		L2	L3	L4	L5	A		B	C	D	E	F	1PH	3PH
	PH	HP	1PH	3PH					1PH	3PH							
BHI/BHS-8M10	1	1	441	441	181	171	138	162	255	233	118	243	108	132	141	11.70	11.50
	3	1	441	441	181	171	138	162	255	233	118	243	108	132	141	11.70	11.50
BHI/BHS-8M15	1	2	514	–	200	180	195	235	267	–	121	245	158	178	177	21.42	–
	3	1.5	–	441	181	171	138	162	–	233	118	243	108	132	141	–	13.18
BHI/BHS-8M20-M	1	1.5	441	441	181	171	138	162	255	233	118	243	108	132	141	13.24	13.05
	3	1.5	441	441	181	171	138	162	255	233	118	243	108	132	141	13.24	13.05
BHI/BHS-8M20	1	2	514	514	200	180	195	235	267	261	121	245	158	178	177	21.50	21.60
	3	2	514	514	200	180	195	235	267	261	121	245	158	178	177	21.50	21.60
BHI/BHS-12M05	1	0.75	403	403	181	171	138	162	255	233	118	243	108	132	141	10.26	10.06
	3	0.75	403	403	181	171	138	162	255	233	118	243	108	132	141	10.26	10.06
BHI/BHS-12M10	1	2	514	–	200	180	195	235	267	–	121	245	158	178	177	20.64	–
	3	1.5	–	441	181	171	138	162	–	233	118	243	108	132	141	–	12.64
BHI/BHS-12M15	3	3	–	493	200	180	195	235	–	261	121	245	158	178	177	–	23.72
	3	3	–	493	200	180	195	235	–	261	121	245	158	178	177	–	23.72
BHI/BHS-12M20	3	4	–	514	230	198	195	245	–	284	133	259	174	198	197	–	29.40
	3	4	–	514	230	198	195	245	–	284	133	259	174	198	197	–	29.40

AHC/AHI , BHI/BHS
Installation and operating manual

1.HANDLING

Before installation, these installation and operating instructions must be read carefully.
The product must be lifted and handled with care.

2.APPLICATIONS

AHC,AHI: Designed to handle clean, thin, non-aggressive water and non-explosive liquids, no solid particles.
BHI,BHS: Designed to handle clean, thin and non-explosive liquid without particles.
That also can be used in light industry application.

3.WORKING LIMITS

AHC, AHI

- Max. operating pressure:
  0˚C to +40˚C –>10 kg/cm², +41˚C to +90˚C –> 6 kg/cm².
- Liquid temperature range: 0˚C ~ +90˚C.
- Max. ambient temperature: +50˚C.
- Min. inlet pressure:
  According to the NPSH curve + a safety margin of 0.5m.
- Max. inlet pressure: Limited by the max. operating pressure.

BHI,BHS

- Max. operating pressure: 10 kg/cm².
- Liquid temperature range: 0˚C ~ +110˚C.
- Max. ambient temperature: + 40˚C.
- Min. inlet pressure:
  According to the NPSH curve + a safety margin of 0.5m.
- Max. inlet pressure: Limited by the max. operating pressure.

4.INSTALLATION

- The pump may be installed as shown in Fig.1.

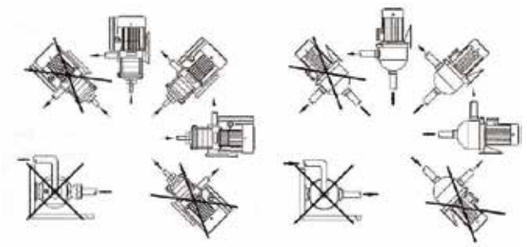

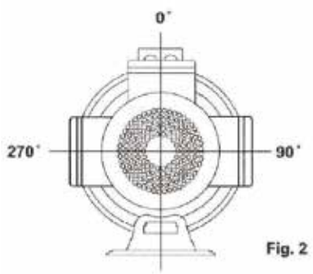

Fig. 2

5.ELECTRICAL CONNECTION

- Position of terminal box (Fig.2)
  The terminal box can be turned to three positions before the pump is installed.

Horizontal Centrifugal Multistage Pumps

6.Others (Fig.4)

- Priming
  Before start up, to fill the pump body and suction pipe through the priming plug, bleeding off all the air.

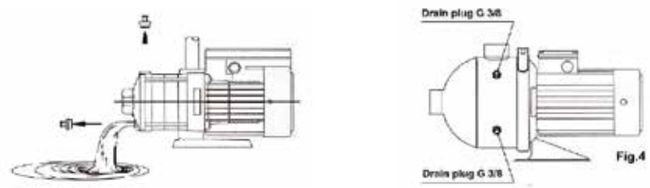

Fig.4

- Maintenance
  No routine maintenance is required.
- Frost protection
  Pumps which are not being used during periods of frost should be drained to avoid damage.
  Remove the priming and drain plugs and allow the pump to drain.
  Do not replace the plugs until the pump is to be used again.

7.TROUBLE SHOOTING

Fault	Possible cause
1. Pump does not runt when the motor starter is operated.	Supply failure
	Main contacts in motor starter are not making contact or the motor coil is faulty.
	Control circuit fuses have cut or are defective.
	Pump is blocked by unknown matters.
2. Pump runs but gives no water.	Motor is failure.
	Pump is not fill with liquid.
	Pump is blocked by unknown matters.
	The suction or discharge pipe is blocked by unknown matters.
	The foot or non-return valve is blocked or failure.
	The suction pipe is leakage.
	The suction lift is too great.
	The air is in suction pipe or pump.
3. Pump capacity is not constant or is reduced.	Pump takes in air.
	The pump, suction pipe or discharge pipe is partly blocked by unknown matters.
	The inlet pressure is too low.
	Wrong direction of rotation (three phase).
	The suction lift is too great.
	The foot or non-return valve is partly blocked.
4. Starter overload cut off immediately when the power is switched on.	Overload setting is too low.
	The cable connection is loose or faulty.
	One fuse is blown.
	Pump is not free to run.
	Contacts in overload are faulty.
	The motor winding is defective.

Nameplate

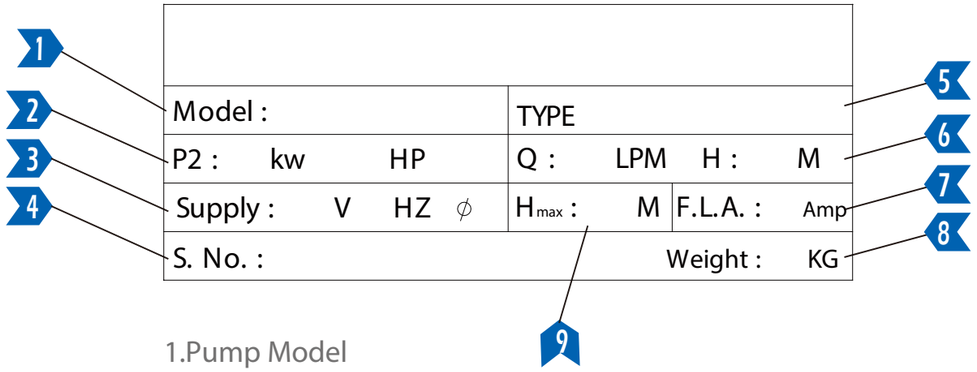

1.Pump Model
2.Output
3.Voltage
4.Serial Number
5.Pump Type
6.Rated Capacity & Head
7.Electric Current
8.Pump Weight
9.Maximum Head

Horizontal Centrifugal Multistage Pumps