APEC PUMP

APEC Pump ENTERPRISE CORP.
3F.,No.394,Sec.2 Mingzhi Rd.,
Taishan Dist.,New Taipei City 243,Taiwan.
Tel : +886-2-29034567
Fax: +886-2-29064567
www.apecpump.com

Vol. PIAV-19091NEMA

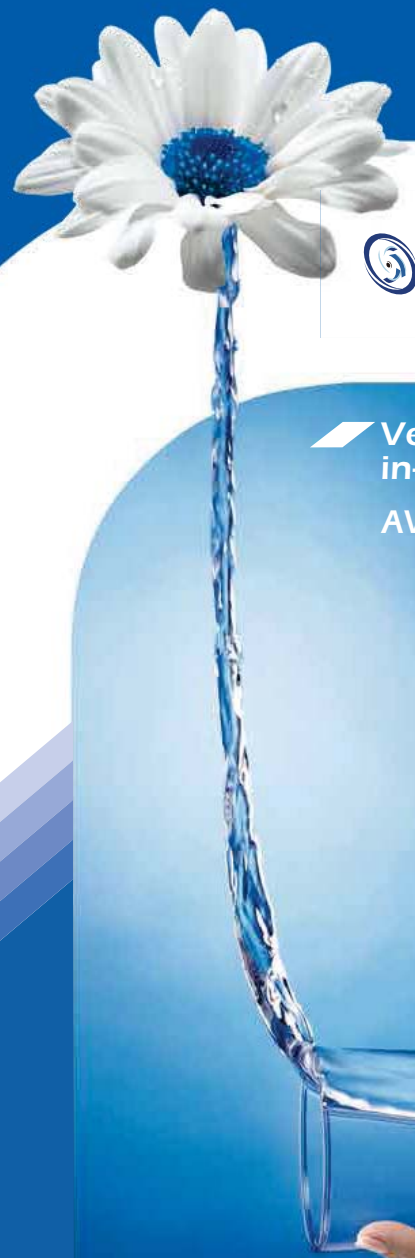

NEMA Standard

APEC PUMP

ISO-9001

Vertical Multistage Centrifugal in-line Pumps

AVC/AVI/AVS Series

60 Hz

Pumps & Pumps

INDEX

NEMA Vertical Multistage Centrifugal Pump

AVC/AVI/AVS-Series

Index / Type Key — 02
General Data — 03
Product Data — 05
Motor Data — 06
Pumped Liquids — 07
AVC(I/S)1~20 Construction — 09
AVC(I/S)32~90 Construction — 10
AVC(I/S)120~150 Construction — 11
AVC/I/S 1 Performance curve — 12
AVC/I/S 1 Dimensions & Weights — 13
AVC/I/S 3 Performance curve — 15
AVC/I/S 3 Dimensions & Weights — 16
AVC/I/S 5 Performance curve — 18
AVC/I/S 5 Dimensions & Weights — 19
AVC/I/S 10 Performance curve — 21
AVC/I/S 10 Dimensions & Weights — 22
AVC/I/S 15 Performance curve — 24
AVC/I/S 15 Dimensions & Weights — 25
AVC/I/S 20 Performance curve — 27
AVC/I/S 20 Dimensions & Weights — 28
AVC/I/S 32 Performance curve — 30
AVC/I/S 32 Dimensions & Weights — 31
AVC/I/S 45 Performance curve — 33
AVC/I/S 45 Dimensions & Weights — 34
AVC/I/S 64 Performance curve — 36
AVC/I/S 64 Dimensions & Weights — 37
AVC/I/S 90 Performance curve — 39
AVC/I/S 90 Dimensions & Weights — 40
AVC/I/S 120 Performance curve — 42
AVC/I/S 120 Dimensions & Weights — 43
AVC/I/S 150 Performance curve — 45
AVC/I/S 150 Dimensions & Weights — 46

Type Key

AVC 3-2

Centrifugal

Pump Type
V : Vertical

Pump material
C : Cast iron (Discharge & Suction)
I : Stainless steel 304
S : Stainless steel 316

Nominal Flow(m^3/h)
1 : 1.2 m^3/h
3 : 3.6 m^3/h
5 : 6 m^3/h
10 : 12 m^3/h
15 : 18 m^3/h
20 : 24 m^3/h
32 : 28 m^3/h
45 : 54 m^3/h
64 : 77 m^3/h
90 : 108 m^3/h
120 : 140 m^3/h
150 : 180 m^3/h

Number of Stages (Impeller)
2 : 2 stages
3 : 3 stages
4 : 4 stages
5 : 5 stages

NEMA 60HZ
Vertical Multistage Centrifugal in-line Pumps
AVC / AVI / AVS

AVC AVI AVS

Feature

in-line design /High Efficiency
Reliability/Easy Maintenance/Wide Range

Application

Irrigation and agriculture
Water supply / Light industry
pressure boosting / Water treatment
Heating, ventilation / air-conditioning

The AVC, AVI and AVS pumps are non-self priming vertical multistage pump of in-line design, flange or with Victaulic coupling with equally sized suction and discharge ports. Stage construction with stainless steel impellers, chambers and pressure casing. All pumps are equipped with a cartridge type mechanical seal for easy maintenance.

AVC, AVI and AVS pumps have different pump sizes and various numbers of stages to provide the flow and the pressure required.

AVC / AVI / AVS Performance Range

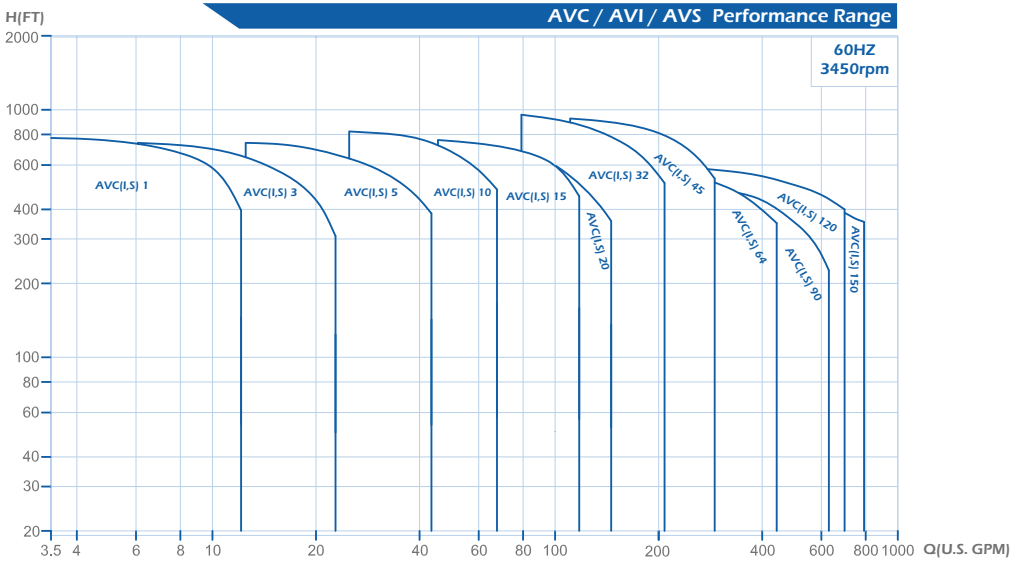

Mechanical Seals

Standard Cartridge type mechanical seal made of Silicon Carbide/ Silicon Carbide/EPDM or Viton. Based on the type of application, alternative materials are available for the seal and the elastomers. The cartridge type mechanical seal can be replaced in minutes without special tools and without dismantling the pump.

Type of Seal

Mechanical Seal	AVC / AVI / AVS		
	1~90	120/150 0.5~60HP	120/150 75~100HP
Cartridge Type			
S: O-ring seal	•	•	
B: Rubber bellows seal			•
QQ	•	•	•
UU	Optional	Optional	
QB	Optional	Optional	
UB	Optional	Optional	
Seals			
E	•	•	•
V	Optional	Optional	Optional

List of Materials	
Q: Silicon carbide	E: EPDM
U: Tungsten carbide	V: Viton
B: Carbon	

Maximum operating and inlet pressures

AVC/AVI/AVS 60 Hz

	Stages	Maximum Operating Pressure	Stages	Maximum Inlet Pressures
AVC,I,S 1	2~27	25bar / 362PSI	2~25	10bar/145PSI
			27	15bar/217PSI
AVC,I,S 3	2~25	25bar / 362PSI	2~15	10bar /145PSI
			17~25	15bar/217PSI
AVC,I,S 5	2~24	25bar / 362PSI	2~9	10bar/145PSI
			10~24	15bar/217PSI
AVC,I,S 10	1~10	16bar / 232PSI	1~5	8bar/116PSI
	12~17	25bar / 362PSI	6~17	10bar/145PSI
AVC,I,S 15	1~8	16bar / 232PSI	1~2	8bar/116PSI
	9~12	25bar / 362PSI	3~12	10bar/145PSI
AVC,I,S 20	1~7	16bar / 232PSI	1	8bar/116PSI
	8~10	25bar / 362PSI	2~10	10bar/145PSI
AVC,I,S 32	(1-1)~5	16bar / 232PSI	(1-1)~2	4bar/58PSI
	(6-2)~(10-2)	30bar / 435PSI	(3-2)~6	10bar/145PSI
			(7-2)~(10-2)	15bar/217PSI
AVC,I,S 45	(1-1)~4	16bar / 232PSI	(1-1)~1	4bar/58PSI
	(5-2)~7	30bar / 435PSI	(2-2)~3	10bar/145PSI
			(4-2)~7	15bar/217PSI
AVC,I,S 64	(1-1)~3	16bar / 232PSI	(1-1)	4bar/58PSI
	(4-2)~(5-2)	30bar / 435PSI	1~(2-1)	10bar/145PSI
			2~(5-2)	15bar/217PSI
AVC,I,S 90	(1-1)~3	16bar / 232PSI	(1-1)~(2-2)	10bar/145PSI
	(4-2)~(4-1)	30bar / 435PSI	(2-1)~(4-2)	15bar/217PSI
AVC,I,S 120	(1-1)~(5-2)	30bar / 435PSI	(1-1)~1	10bar/145PSI
			(2-2)~(3-1)	15bar/217PSI
			3~(5-2)	20bar/290PSI
AVC,I,S 150	(1-1)~(4-2)	30bar / 435PSI	(1-1)	10bar/145PSI
			1~2	15bar/217PSI
			(3-2)~(4-2)	20bar/290PSI

Rule to follow: The inlet pressure + the pressure against a closed valve < Max. Operating pressure.

All technical information is subject to change without notice.

NEMA 60HZ
Vertical Multistage Centrifugal in-line Pumps

Product Data

AVC / AVI /AVS												
Range	**1**	**3**	**5**	**10**	**15**	**20**	**32**	**45**	**64**	**90**	**120**	**150**
60Hz												
Nominal flow (m^3/h)	1.2	3.6	6	12	18	24	28	54	77	108	140	180
(GPM)	5.2	15.8	26.4	52.8	79.2	105.6	167	237	339	475	616	792
Flow range (m^3/h)	0.8-2.9	1.5-5.4	3-10	6-15.5	10.5-28	12.5-35	18-48	26-70	36-102	54-146	60-160	75-180
(GPM)	4.2-13	8.4-25.8	13.2-44	26.4-70	47.9-123	56.7-154	79-211	114-308	158-449	237-642	264-704	330-946
Max. pressure (bar)	23.5	23.3	23	24.5	23.5	20.5	27	26	17.8	15.9	18.5	15.3
(PSI)	340	337	333	355	340	297	391	377	258	230	268	221
Fluid temperature (˚C)	-15˚C to+120˚C											
(F˚)	7˚F to 248˚F											
Version												
AVC	Cast Iron and Stainless Steel EN 1.4301/AISI 304											
AVI	Stainless Steel EN 1.4301/AISI 304											
AVS	Stainless Steel EN 1.4401/AISI 316											
Pipe Connection												
AVC Flange (ANSI)	DN 25/ DN 32	DN 25/ DN 32	DN 25/ DN 32	DN 40	DN 50	DN 50	DN 65	DN 80	DN 100	DN 100	DN 125	DN 125
AVI/S Flange (ANSI)	DN 25/ DN32	DN 25/ DN32	DN 25/ DN32	DN 40	DN 50	DN 50	DN 65	DN 80	DN 100	DN 100	DN 125	DN 125
AVI/S Victaulic	R 1¼ DN32	R1¼ DN32	R1¼ DN32	R 2 DN50	R 2 DN50	R 2 DN50	N/A	N/A	N/A	N/A	N/A	N/A

>Flange standards : Refer to dimensional drawings

Pump Nameplate Information

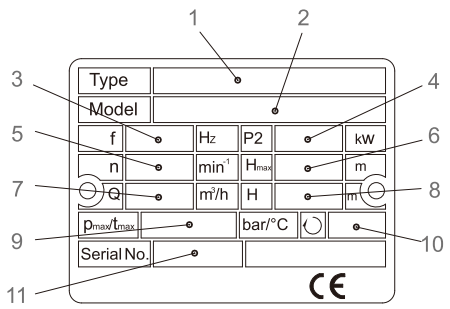

1. Pump Type · Seal Type
2. Pump Model
3. Frequency
4. Rated Power
5. Speed
6. Maximum Head
7. Capacity
8. Head Range
9. Maximum Operating Pressure/Max.temperature
10. Rotating Direction
11. Serial number

NEMA 60HZ
Vertical Multistage Centrifugal in-line Pumps

Mortor Data

60Hz

Motor Type				Frame	
Pole	**HP**	**kW**	**PH**	**TEFC motors (C-face)**	**ODP motors (C-face)**
2	1/3	0.25	1 3	56C	- - -
	1/2	0.37	1 3	56C	- - -
	3/4	0.55	1 3	56C	- - -
	1	0.75	1 3	56C	- - -
	1 1/2	1.1	1 3	56C	- - -
	2	1.5	1 3	56C	- - -
	3	2.2	1 3	182TC	- - -
	5	3.7	1	213TC	- - -
			3	182TC	
	7 1/2	5.5	1 3	213TC	- - -
	10	7.5	1 3	213TC	- - -
	15	11	3	254TC	254TC
	20	15	3	254TC	254TC
	25	18.5	3	284TSC	284TSC
	30	22	3	286TSC	284TSC
	40	30	3	286TSC	286TSC
	50	37	3	326TSC	324TSC
	60	45	3	364TSC	324TSC
	75	55	3	365TSC	364TSC
	100	75	3	405TSC	365TSC

Minimum Inlet Pressure - NPSHA

Calculation of the inlet pressure "H" is recommended in these situations:

- The liquid temperature is high.
- The flow is significantly higher than the rated flow.
- Water is drawn from depths.
- Water is drawn through long pipes.
- Inlet conditions are poor.

To avoid cavitation, make sure that there is a minimum pressure on the suction side of the pump. The maximum suction lift "H" in feet can be calculated as follows:

$H = P_b - NPSHR - H_f - H_v - H_s$

P_b = Barometric pressure in feet absolute. (Barometric pressure can be set to 33.9 feet. At sea level. In closed systems, pb indicates system pressure in feet.)

NPSHR = Net Positive Suction Head Required in feet. (To be read from the NPSHR curve at the highest flow the pump will be delivering).

H_f = Friction loss in suction pipe in feet. (At the highest flow the pump will be delivering.)

H_v = Vapor pressure in feet. (To be read from the vapor pressure scale. "H_v" depends on the liquid temperature "T_m").

H_s = Safety margin = minimum 2.0 feet.

If the "H" calculated is positive, the pump can operate at a suction lift of maximum "H" feet.

If the "H" calculated is negative, an inlet pressure of minimum "H" feet is required.

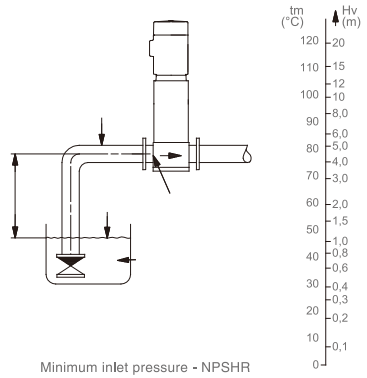

Minimum inlet pressure - NPSHR

Note: In order to avoid cavitation **never**, select a pump whose duty point lies too far to the right on the NPSHR curve.

Always check the NPSHR value of the pump at the highest possible flow.

NEMA 60HZ
Vertical Multistage Centrifugal in-line Pumps

Pumped Liquids

AVC/I/S pumps can handle a wide variety of liquids, each with its own characteristic.

AVC/I
Non-corrosive liquids
For fluid transfer, circulation and pressure boosting of cold or hot clean water.

AVS
Industrial liquids
Light acids

The fluids covered in the list are not complete. Data on the application limits of different pump materials when handling any of the listed fluids are considered to be the best choices. However, the table is intended as a general guide only, and cannot replace actual esting of the pumped fluids and pump materials under specific working conditions.
When choosing the pump version, sufficient attention should be given to the flow medium, such as density, solidification point, viscosity as well as ex-protection requirement. The limits of applicability of the pumps, based on pressure and temperature must also be considered.

Recommended		AVC(I)		AVS	
Pumped fluid	"Fluid Concentration, temperature"	EPDM	Viton	EPDM	Viton
Acetic acid anhydride	25°C (77°F)			●	
Alkaline cleaner		●			
Aluminium sulphate	10%,25°C (77°F)				●
Ammonia water (A. hydroxide)	20%,40°C (104°F)	●			
Ammonia hydrogen carbonate	10%,40°C (104°F)	●		●	
Benzoic acid	10%,90°C (194°F)				●
Boric acid	Unsaturated solution,60°C (140°F)				●
Butanol	60°C (140°F)	●			
Calcium acetate	30%,50°C (122°F)	●			
Calcium hydroxide	Saturated solution,50°C (122°F)	●			
Chromic acid	1%,20°C (68°F)				●
Condensate	90°C (194°F)	●			
Copper sulphate	Unsaturated solution,60°C (140°F)				●
Deionic (fully desalinated water)	50°C (122°F)			●	
Ethanol	100%,20°C (68°F)	●			
Ehylene glycol/Diethylene glycol	40%,70°C (158°F)	●	●	●	●
Fixer	25°C (77°F)				●
Formic acid	5%,20°C (68°F)			●	

NEMA 60HZ
Vertical Multistage Centrifugal in-line Pumps

		AVC(I)		AVS	
Pumped fluid	"Fluid Concentration, temperature"	EPDM	Viton	EPDM	Viton
Fruit juice	50°C (122°F)				●
Glycerine	50%, 50°C (122°F)	●			
Heating oil (Light)		●			●
Hydraulic oil	100%, 100°C (212°F)		●		
Isopropanol		●			
Lactic acid	10%, 20°C (68°F)				●
Linoleic acid	100%, 20°C (68°F)	●			
Linseed oil	60°C (140°F)		●		
Liqueur	60°C (140°F)				●
Maize oil	80°C (176°F)		●		
Maleic acid	50%, 50°C (122°F)				●
Methanol	100%, 20°C (68°F)	●			
Motor oil	100%, 80°C (176°F)	●			
Oil-water-mixture	100°C (212°F)		●		
Oxalic acid	1%, 20°C (68°F)			●	
Peanut oil	100%, 80°C (176°F)		●		
Phosphoric acid	20%, 20°C (68°F)			●	
Polyglycols	90°C (194°F)		●		●
Polyethylene glycols	40%, 70°C (158°F)	●			
Potassium carbonate	10%, 60°C (140°F)	●			
Potassium hydrogen carbonate	10%, 60°C (140°F)	●			
Potassium permanganate	5%, 20°C (68°F)			●	
Potassium sulphate	Unsaturated solution, 80°C (176°F)			●	
Rapeseed oil	100%, 80°C (176°F)		●		
Silicone oil	100%		●		
Sodium carbonate	10%, 60°C (140°F)			●	
Sodium hydroxide	25%, 50°C (122°F)			●	
Sodium nitrate	Unsaturated solution, 80°C (176°F)			●	
Sodium phosphate	5%, 100°C (212°F)			●	
Sodium sulphate	10%, 60°C (140°F)			●	
Sulphuric acid	5%, 25°C (77°F)				●
Water					
Swimming pool water	35°C (95°F)	● AVI		●	
Deionic	50°C (122°F)			●	
Distilled water	50°C (122°F)			●	
Decarbonated water				●	
Soft water				●	
Heating water				●	
Boiler water				●	
Pure water				●	
Rinsing water		● AVI		●	

NEMA 60HZ
Vertical Multistage Centrifugal in-line Pumps

Construction

AVC 1,3,5,10,15,20

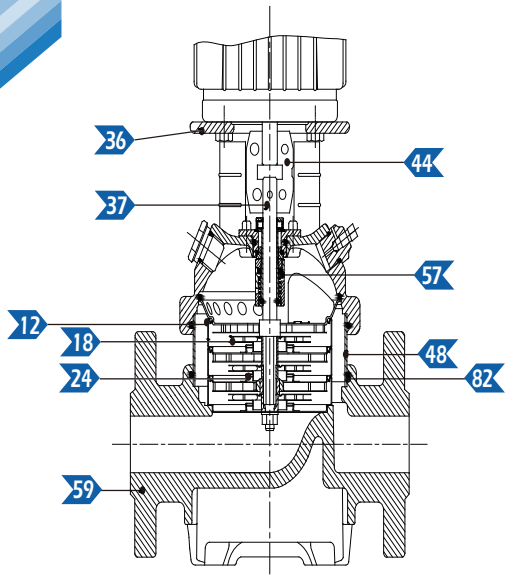

AVI/S 1,3,5,10,15,20

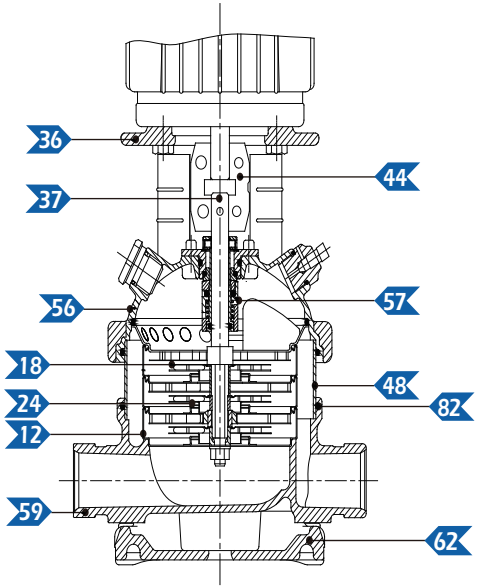

Construction

Pos.	Name	Material	AVC 1,3,5,10,15,20	AVI 1,3,5,10,15,20	AVS 1,3,5,10,15,20
			Standard USA	Standard USA	Standard USA
36	Pump head	Cast Iron	ASTM 25B	ASTM 65-45-12	ASTM 65-45-12
56	Pump head cover	Stainless steel	N/A	AISI 304	AISI 316
18	Impeller	Stainless steel	AISI 304	AISI 304	AISI 316
37	Shaft	Stainless steel	AISI 431	AISI 431	AISI 316
48	Outer sleeve	Stainless steel	AISI 304	AISI 304	AISI 316
82	O-ring for outer sleeve	EPDM			
12	Chamber	Stainless steel	AISI 304	AISI 304	AISI 316
24	Neck ring	PTFE			
59	Base	Cast Iron	ASTM 35B	N/A	N/A
	Base	Stainless steel	N/A	AISI 304	AISI 316
62	Base plate	Cast Iron		ASTM 25B	ASTM 25B
44	Coupling	Fe-Cu-C	MPIF FC0525	MPIF FC0525	MPIF FC0525
57	Mechanical seal	Cartridge type			

NEMA 60HZ
Vertical Multistage Centrifugal in-line Pumps

Construction

AVC 32,45,64,90

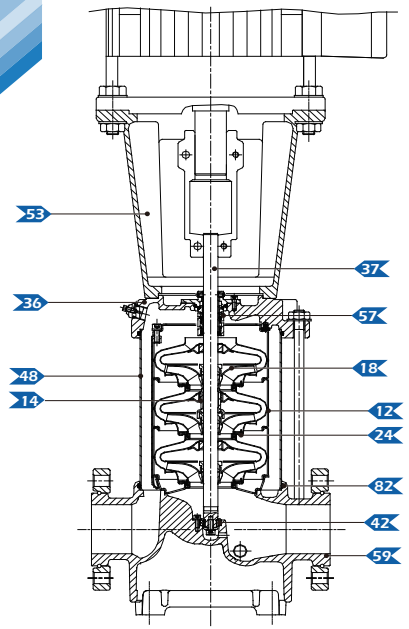

AVI/S 32,45,64,90

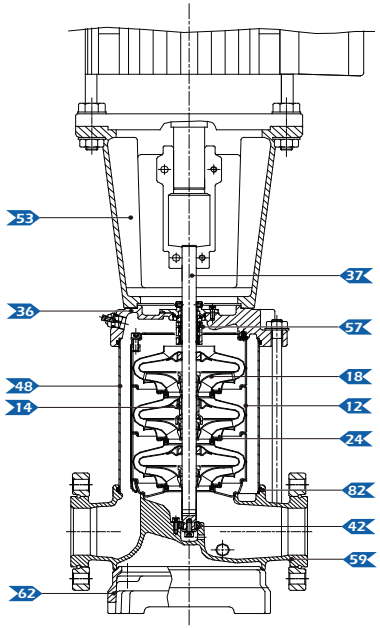

Construction

Pos.	Name	Material	AVC 32,45,64,90	AVI 32,45,64,90	AVS 32,45,64,90
			Standard USA	Standard USA	Standard USA
36	Pump head	Cast Iron	ASTM 35B		
		Stainless steel		AISI 304	AISI 316
53	Motor bracket	Cast iron	ASTM 35B	ASTM 35B	ASTM 35B
18	Impeller	Stainless steel	AISI 304	AISI 304	AISI 316
37	Shaft	Stainless steel	AISI 431	AISI 431	AISI 316
48	Outer sleeve	Stainless steel	AISI 304	AISI 304	AISI 316
82	O-ring for outer sleeve	EPDM			
12	Chamber	Stainless steel	AISI 304	AISI 304	AISI 316
24	Neck ring	Carbon Fiber+POB+PTFE			
59	Base	Cast Iron	ASTM 35B	N/A	N/A
	Base	Stainless steel	N/A	AISI 304	AISI 316
62	Base plate	Cast Iron	N/A	ASTM 35B	ASTM 35B
57	Mechanical seal	Cartridge type			
14	Bearing ring		Bronze	Bronze	POB+Graphite+PTFE
42	Bottom bearing ring	Tungsten carbide /Tungsten carbide			

NEMA 60HZ
Vertical Multistage Centrifugal in-line Pumps

Construction

AVC 120,150

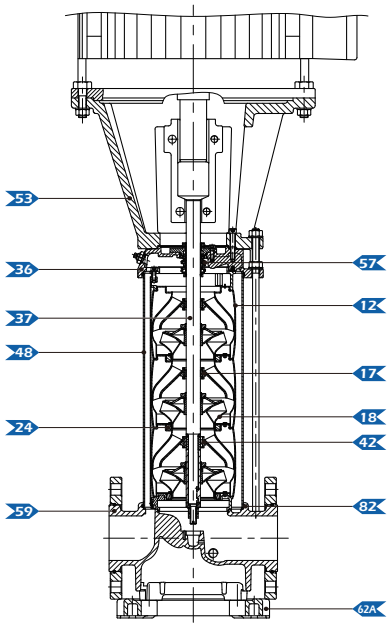

AVI/S 120,150

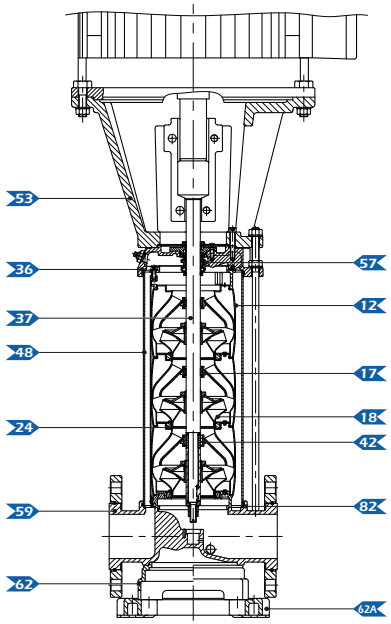

Construction

Pos.	Name	Material	AVC 120,150	AVI 120,150	AVS 120,150
			Standard USA	Standard USA	Standard USA
36	Pump head	Cast iron	ASTM 35B	N/A	N/A
		Stainless steel	N/A	AISI 304	AISI 316
53	Motor bracket (15~60HP)	Cast iron	ASTM 35B	ASTM 35B	ASTM 35B
	Motor bracket (75~100HP)	Cast iron	ASTM 65-45-12	ASTM 65-45-12	ASTM 65-45-12
17	Bearing	PTEF			
18	Impeller	Stainless steel	AISI 304	AISI 304	AISI 316
37	Shaft	Stainless steel	AISI 431	AISI 431	AISI 316
48	Outer sleeve	Stainless steel	AISI 304	AISI 304	AISI 316
82	O-ring for outer sleeve	EPDM			
12	Chamber	Stainless steel	AISI 304	AISI 304	AISI 316
24	Neck ring	PTFE			
59	Base	Cast iron	ASTM 35B	N/A	N/A
	Base	Stainless steel	N/A	AISI 304	AISI 316
62	Base plate	Cast iron	N/A	ASTM 65-45-12	ASTM 65-45-12
62A	Base plate	Cast iron	ASTM 65-45-12	ASTM 65-45-12	ASTM 65-45-12
57	Mechanical seal	Cartridge type			
42	Bottom bearing ring	SIC/SIC			

All technical information is subject to change without notice.

NEMA 60HZ
Vertical Multistage Centrifugal in-line Pumps

Performance Curve

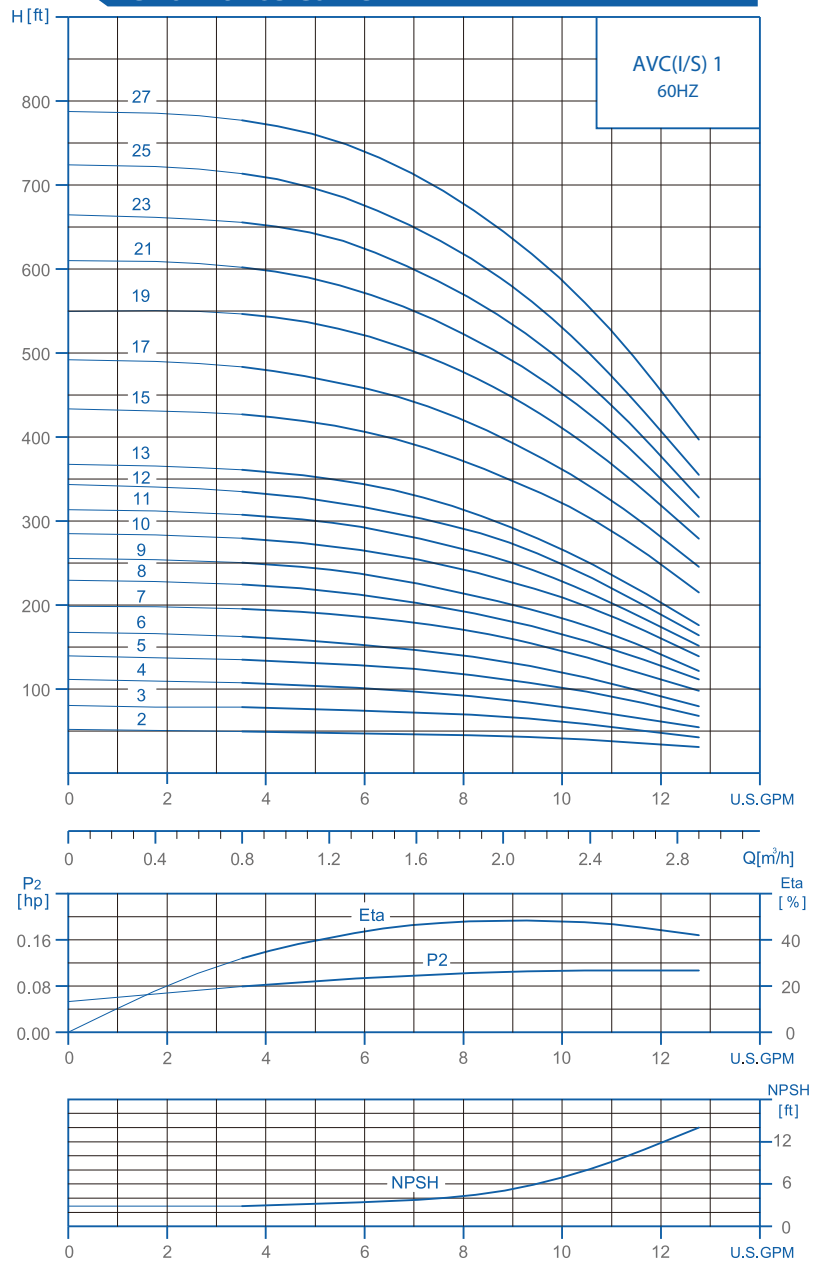

NEMA 60HZ
Vertical Multistage Centrifugal in-line Pumps

Dimensions & Weights AVC 1

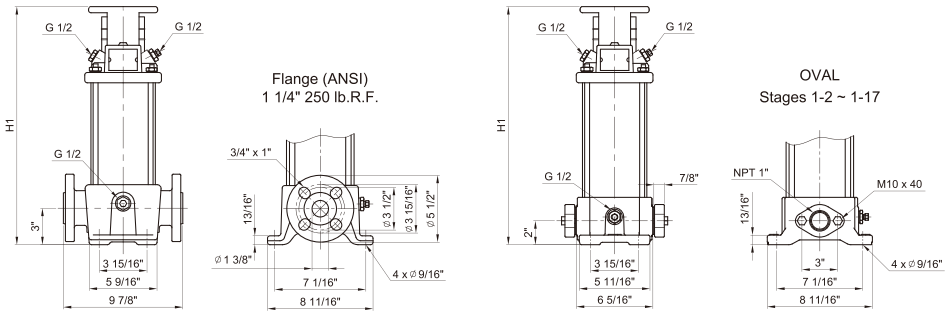

Pump type	Recommend motor of HP			AVC				
	P_2			NEMA Frame TEFC motors	Dimension[inch]		Weights[lbs]	
					ANSI flange	OVAL	ANSI flange	OVAL
	[HP]	[kW]	[PH]		H1	H1		
AVC 1-2	1/3	0.25	1 / 3	56C	11.93	10.94	41	32
AVC 1-3	1/3	0.25	1 / 3	56C	11.93	10.94	41	32
AVC 1-4	1/2	0.37	1 / 3	56C	12.64	11.65	42	33
AVC 1-5	1/2	0.37	1 / 3	56C	13.35	12.36	43	33
AVC 1-6	3/4	0.55	1 / 3	56C	14.06	13.07	44	34
AVC 1-7	3/4	0.55	1 / 3	56C	14.76	13.78	44	35
AVC 1-8	1	0.75	1 / 3	56C	15.47	14.49	45	36
AVC 1-9	1	0.75	1 / 3	56C	16.18	15.20	46	37
AVC 1-10	1	0.75	1 / 3	56C	16.89	15.91	46	37
AVC 1-11	1 1/2	1.1	1 / 3	56C	17.60	16.61	47	38
AVC 1-12	1 1/2	1.1	1 / 3	56C	18.31	17.32	48	39
AVC 1-13	1 1/2	1.1	1 / 3	56C	19.02	18.03	49	40
AVC 1-15	2	1.5	1 / 3	56C	20.43	19.45	51	41
AVC 1-17	2	1.5	1 / 3	56C	21.85	20.87	52	43
AVC 1-19	2	1.5	1 / 3	56C	23.27	-	54	-
AVC 1-21	3	2.2	1 / 3	182TC	25.63	-	61	-
AVC 1-23	3	2.2	1 / 3	182TC	27.05	-	63	-
AVC 1-25	3	2.2	1 / 3	182TC	28.46	-	64	-
AVC 1-27	3	2.2	1 / 3	182TC	29.84	-	66	-

NEMA 60HZ
Vertical Multistage Centrifugal in-line Pumps

Dimensions & Weights AVI/S 1

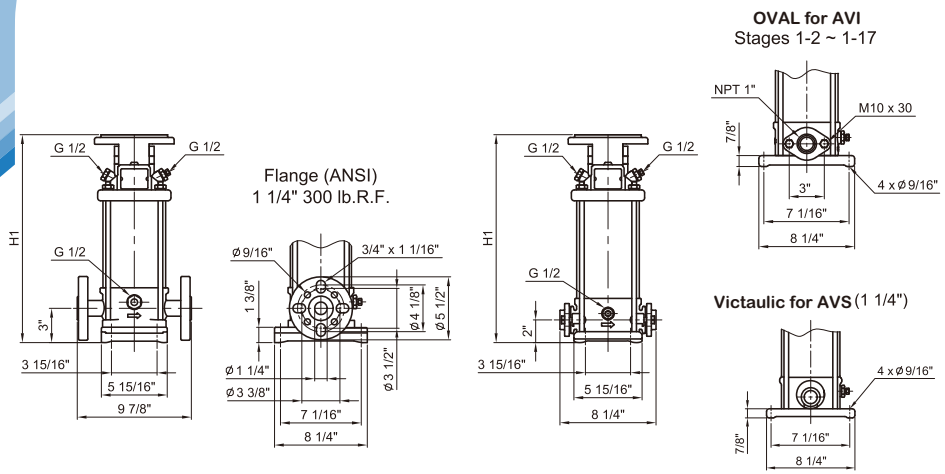

Pump type	Recommend motor of HP			AVI,AVS						
	P_2			NEMA Frame TEFC motors	Dimension[inch]			Weights[lbs]		
					ANSI flange	OVAL (AVI only)	Victaulic (AVS only)	ANSI flange	OVAL (AVI only)	Victaulic (AVS only)
	[HP]	[kW]	[PH]		H1	H1	H1			
AVI,AVS 1-2	1/3	0.25	1 / 3	56C	12.05	11.06	11.06	34	31	32
AVI,AVS 1-3	1/3	0.25	1 / 3	56C	12.05	11.06	11.06	34	31	32
AVI,AVS 1-4	1/2	0.37	1 / 3	56C	12.76	11.77	11.77	35	32	33
AVI,AVS 1-5	1/2	0.37	1 / 3	56C	13.46	12.48	12.48	35	32	33
AVI,AVS 1-6	3/4	0.55	1 / 3	56C	14.17	13.19	13.19	36	33	34
AVI,AVS 1-7	3/4	0.55	1 / 3	56C	14.84	13.86	13.86	37	34	35
AVI,AVS 1-8	1	0.75	1 / 3	56C	15.55	14.57	14.57	38	35	36
AVI,AVS 1-9	1	0.75	1 / 3	56C	16.26	15.28	15.28	38	36	36
AVI,AVS 1-10	1	0.75	1 / 3	56C	16.97	15.98	15.98	39	36	37
AVI,AVS 1-11	1 1/2	1.1	1 / 3	56C	17.68	16.69	16.69	40	37	38
AVI,AVS 1-12	1 1/2	1.1	1 / 3	56C	18.39	17.40	17.40	41	38	39
AVI,AVS 1-13	1 1/2	1.1	1 / 3	56C	19.09	18.11	18.11	42	39	39
AVI,AVS 1-15	2	1.5	1 / 3	56C	20.55	19.57	19.57	43	40	41
AVI,AVS 1-17	2	1.5	1 / 3	56C	21.97	20.98	20.98	45	42	43
AVI,AVS 1-19	2	1.5	1 / 3	56C	23.39	-	22.40	46	-	44
AVI,AVS 1-21	3	2.2	1 / 3	182TC	25.73	-	24.74	54	-	52
AVI,AVS 1-23	3	2.2	1 / 3	182TC	27.15	-	26.16	56	-	54
AVI,AVS 1-25	3	2.2	1 / 3	182TC	28.56	-	27.58	57	-	55
AVI,AVS 1-27	3	2.2	1 / 3	182TC	29.98	-	29.00	59	-	57

NEMA 60HZ
Vertical Multistage Centrifugal in-line Pumps

Performance Curve

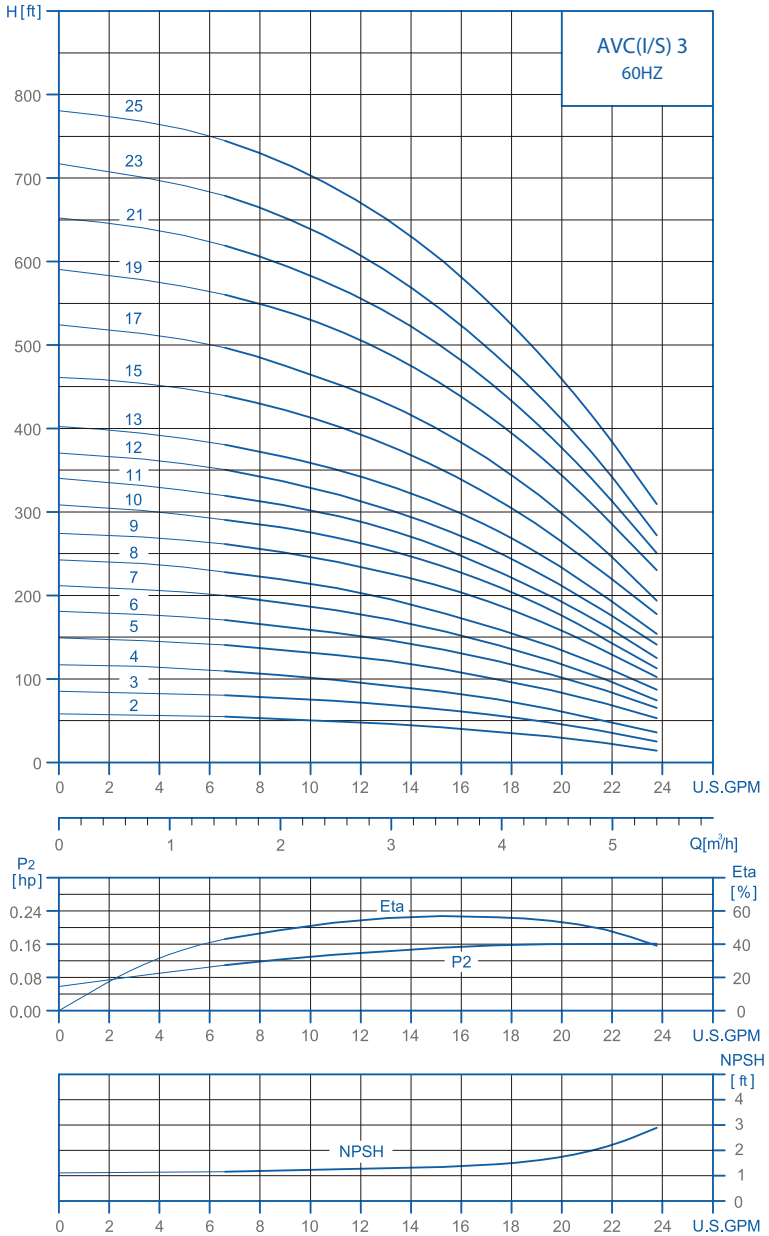

All technical information is subject to change without notice.

NEMA 60HZ
Vertical Multistage Centrifugal in-line Pumps

Dimensions & Weights AVC 3

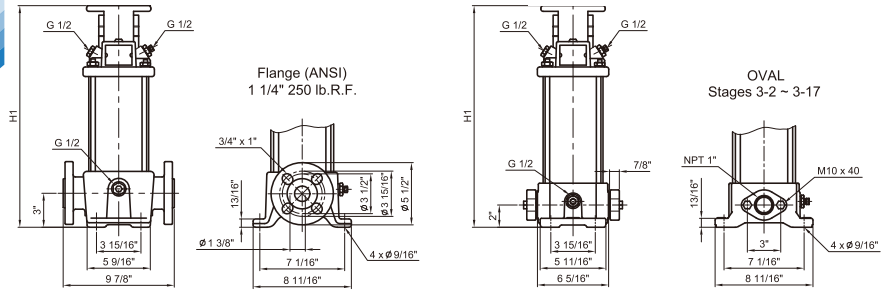

Pump type	Recommend motor of HP			AVC				
				NEMA Frame TEFC motors	Dimension[inch]		Weights[lbs]	
	P_2				ANSI flange	OVAL	ANSI flange	OVAL
	[HP]	[kW]	[PH]		H1	H1		
AVC 3-2	1/3	0 25	1 / 3	56C	11.93	10.94	41	32
AVC 3-3	1/2	0.37	1 / 3	56C	11.93	10.94	41	32
AVC 3-4	3/4	0.55	1 / 3	56C	12.64	11.65	42	33
AVC 3-5	3/4	0.55	1 / 3	56C	13.35	12.36	43	33
AVC 3-6	1	0.75	1 / 3	56C	14.06	13.07	44	34
AVC 3-7	1 1/2	1.1	1 / 3	56C	14.76	13.78	44	35
AVC 3-8	1 1/2	1.1	1 / 3	56C	15.47	14.49	45	36
AVC 3-9	1 1/2	1.1	1 / 3	56C	16.18	15.20	46	37
AVC 3-10	2	1.5	1 / 3	56C	16.89	15.91	47	37
AVC 3-11	2	1.5	1 / 3	56C	17.60	15.91	47	38
AVC 3-12	2	1.5	1 / 3	56C	18.31	17.32	48	39
AVC 3-13	3	2.2	1 / 3	182TC	21.38	20.39	55	46
AVC 3-15	3	2.2	1 / 3	182TC	22.80	21.81	57	47
AVC 3-17	3	2.2	1 / 3	182TC	24.37	23.39	58	49
AVC 3-19	3	2.2	1 / 3	182TC	25.59	-	60	-
AVC 3-21	5	3.7	1 / 3	182TC	27.01	-	61	-
AVC 3-23	5	3.7	1 / 3	182TC	27.01	-	63	-
AVC 3-25	5	3.7	1 / 3	182TC	28.43	-	64	-

* For the 5HP single phase TEFC motor, we provide 213TC Frame

NEMA 60HZ
Vertical Multistage Centrifugal in-line Pumps

Dimensions & Weights AVI/S 3

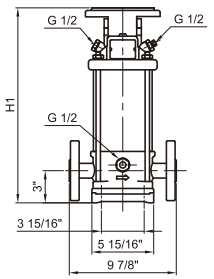

Flange (ANSI)
1 1/4" 300 lb.R.F.

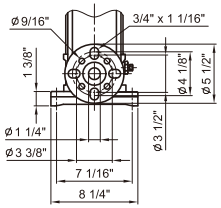

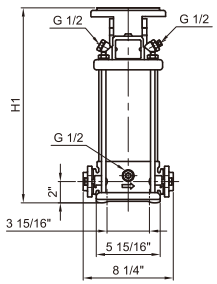

OVAL for AVI
Stages 3-2 ~ 3-17

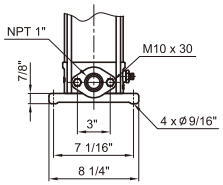

Victaulic for AVS (1 1/4")

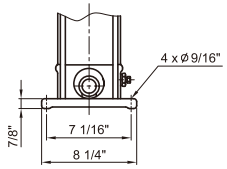

Pump type	Recommend motor of HP			AVI,AVS						
	P_2			NEMA Frame TEFC motors	Dimension[inch]			Weights[lbs]		
	[HP]	[kW]	[PH]		ANSI flange H1	OVAL (AVI only) H1	Victaulic (AVS only) H1	ANSI flange	OVAL (AVI only)	Victaulic (AVS only)
AVI,AVS 3-2	1/3	0.25	1 / 3	56C	12.05	11.06	11.06	34	31	32
AVI,AVS 3-3	1/2	0.37	1 / 3	56C	12.05	11.06	11.06	34	31	32
AVI,AVS 3-4	3/4	0.55	1 / 3	56C	12.76	11.77	11.77	35	32	33
AVI,AVS 3-5	3/4	0.55	1 / 3	56C	13.43	12.44	12.44	35	32	33
AVI,AVS 3-6	1	0.75	1 / 3	56C	14.13	13.15	13.15	36	33	34
AVI,AVS 3-7	1 1/2	1.1	1 / 3	56C	14.84	13.86	13.86	37	34	35
AVI,AVS 3-8	1 1/2	1.1	1 / 3	56C	15.55	14.57	14.57	38	35	36
AVI,AVS 3-9	1 1/2	1.1	1 / 3	56C	16.30	15.31	15.31	38	36	36
AVI,AVS 3-10	2	1.5	1 / 3	56C	17.01	16.02	16.02	39	36	37
AVI,AVS 3-11	2	1.5	1 / 3	56C	17.72	16.73	16.73	40	37	38
AVI,AVS 3-12	2	1.5	1 / 3	56C	18.43	17.44	17.44	41	38	39
AVI,AVS 3-13	3	2.2	1 / 3	182TC	20.06	19.07	19.07	48	45	46
AVI,AVS 3-15	3	2.2	1 / 3	182TC	21.48	20.49	20.49	49	46	47
AVI,AVS 3-17	3	2.2	1 / 3	182TC	22.89	21.91	21.91	51	48	49
AVI,AVS 3-19	3	2.2	1 / 3	182TC	24.50	-	23.50	52	-	50
AVI,AVS 3-21	5	3.7	1 / 3	182TC	25.73	-	24.74	54	-	52
AVI,AVS 3-23	5	3.7	1 / 3	182TC	27.15	-	26.16	56	-	54
AVI,AVS 3-25	5	3.7	1 / 3	182TC	28.56	-	27.58	57	-	55

* For the 5HP single phase TEFC motor, we provide 213TC Frame

NEMA 60HZ
Vertical Multistage Centrifugal in-line Pumps

Performance Curve

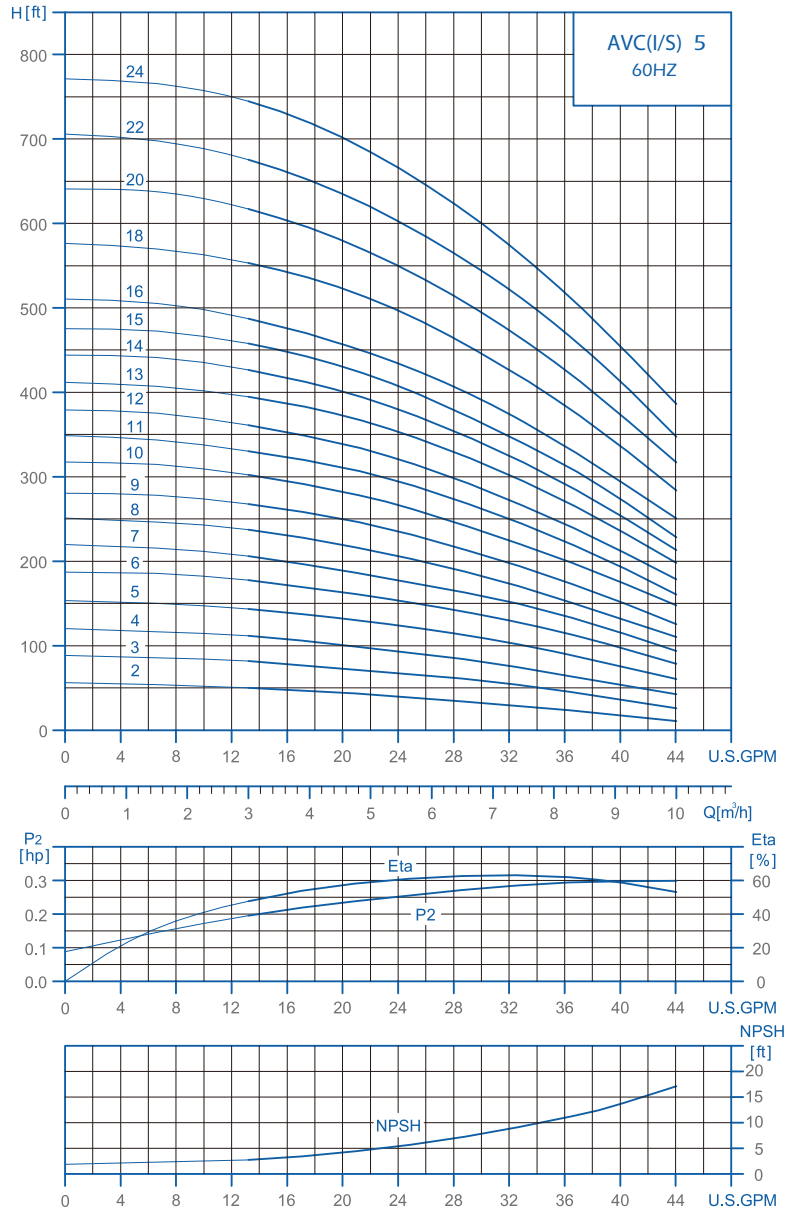

NEMA 60HZ
Vertical Multistage Centrifugal in-line Pumps

Dimensions & Weights AVC 5

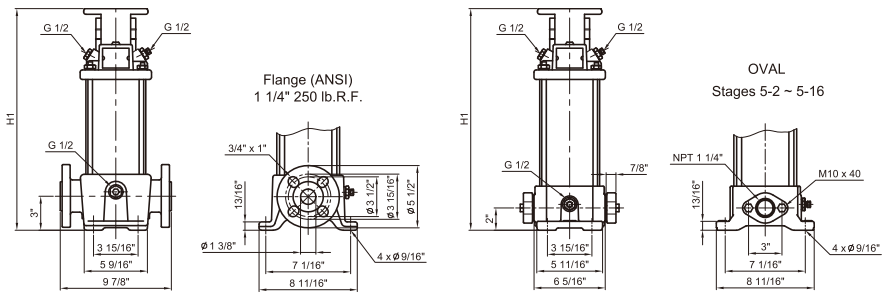

Pump type	Recommend motor of HP			AVC				
	P_2			NEMA Frame TEFC motors	Dimension[inch]		Weights[lbs]	
					ANSI flange	OVAL	ANSI flange	OVAL
	[HP]	[kW]	[PH]		H1	H1		
AVC 5-2	3/4	0.55	1 / 3	56C	11.93	10.94	41	32
AVC 5-3	1	0.75	1 / 3	56C	12.99	12.01	42	33
AVC 5-4	1 1/2	1.1	1 / 3	56C	14.06	13.07	43	34
AVC 5-5	1 1/2	1.1	1 / 3	56C	15.12	14.30	44	35
AVC 5-6	2	1.5	1 / 3	56C	16.18	15.20	56	36
AVC 5-7	2	1.5	1 / 3	56C	17.24	16.26	46	37
AVC 5-8	3	2.2	1 / 3	182TC	19.25	18.27	53	44
AVC 5-9	3	2.2	1 / 3	182TC	20.31	19.33	54	46
AVC 5-10	3	2.2	1 / 3	182TC	21.34	20.35	56	47
AVC 5-11	5	3.7	1 / 3	182TC	22.40	21.42	57	48
AVC 5-12	5	3.7	1 / 3	182TC	23.46	22.48	58	49
AVC 5-13	5	3.7	1 / 3	182TC	24.53	23.54	59	50
AVC 5-14	5	3.7	1 / 3	182TC	25.59	24.61	60	51
AVC 5-15	5	3.7	1 / 3	182TC	26.65	25.67	61	52
AVC 5-16	5	3.7	1 / 3	182TC	27.72	26.73	62	53
AVC 5-18	7 1/2	5.5	1 / 3	213TC	30.47	-	70	-
AVC 5-20	7 1/2	5.5	1 / 3	213TC	32.60	-	72	-
AVC 5-22	7 1/2	5.5	1 / 3	213TC	34.72	-	74	-
AVC 5-24	7 1/2	5.5	1 / 3	213TC	36.85	-	76	-

* For the 5HP single phase TEFC motor, we provide 213TC Frame

NEMA 60HZ
Vertical Multistage Centrifugal in-line Pumps

Dimensions & Weights AVI/S 5

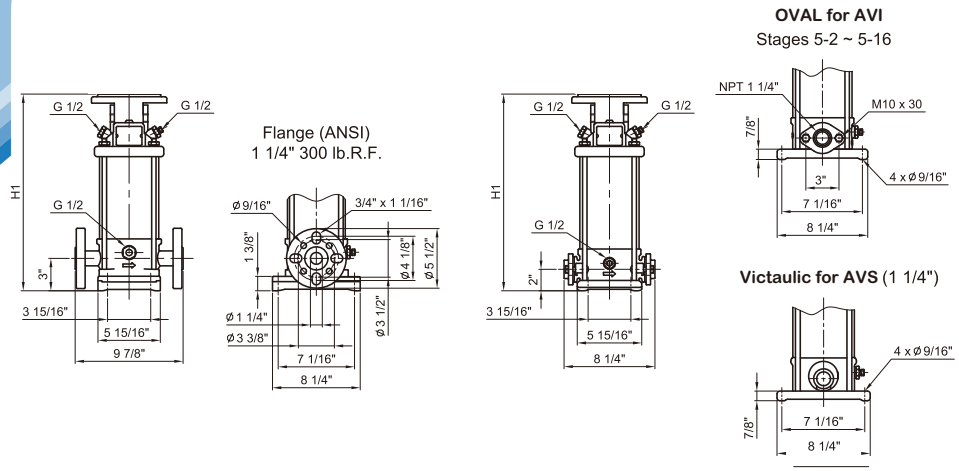

Pump type	Recommend motor of HP			AVI,AVS						
	P_2			NEMA Frame TEFC motors	Dimension[inch]			Weights[lbs]		
					ANSI flange	OVAL (AVI only)	Victaulic (AVS only)	ANSI flange	OVAL (AVI only)	Victaulic (AVS only)
	[HP]	[kW]	[PH]		H1	H1	H1			
AVI,AVS 5-2	3/4	0.55	1 / 3	56C	12.0	11.1	11.1	33	31	31
AVI,AVS 5-3	1	0.75	1 / 3	56C	13.1	12.1	12.1	35	32	33
AVI,AVS 5-4	1 1/2	1.1	1 / 3	56C	14.1	13.1	13.1	36	34	34
AVI,AVS 5-5	1 1/2	1.1	1 / 3	56C	15.2	14.3	14.3	37	35	35
AVI,AVS 5-6	2	1.5	1 / 3	56C	16.3	15.3	15.3	38	36	36
AVI,AVS 5-7	2	1.5	1 / 3	56C	17.4	16.4	16.4	39	37	37
AVI,AVS 5-8	3	2.2	1 / 3	182TC	19.4	18.4	18.4	46	45	44
AVI,AVS 5-9	3	2.2	1 / 3	182TC	20.4	19.4	19.4	48	46	46
AVI,AVS 5-10	3	2.2	1 / 3	182TC	21.5	20.5	20.5	49	47	47
AVI,AVS 5-11	5	3.7	1 / 3	182TC	22.5	21.6	21.6	50	48	48
AVI,AVS 5-12	5	3.7	1 / 3	182TC	23.6	22.6	22.6	51	49	49
AVI,AVS 5-13	5	3.7	1 / 3	182TC	24.7	23.7	23.7	52	50	50
AVI,AVS 5-14	5	3.7	1 / 3	182TC	25.7	24.7	24.7	53	52	51
AVI,AVS 5-15	5	3.7	1 / 3	182TC	26.8	25.8	25.8	55	53	53
AVI,AVS 5-16	5	3.7	1 / 3	182TC	27.9	-	26.9	56	-	54
AVI,AVS 5-18	7 1/2	5.5	1 / 3	213TC	30.6	-	29.6	63	-	61
AVI,AVS 5-20	7 1/2	5.5	1 / 3	213TC	32.7	-	31.7	66	-	64
AVI,AVS 5-22	7 1/2	5.5	1 / 3	213TC	34.8	-	33.8	68	-	66
AVI,AVS 5-24	7 1/2	5.5	1 / 3	213TC	36.9	-	36.0	70	-	68

* For the 5HP single phase TEFC motor, we provide 213TC Frame

NEMA 60HZ
Vertical Multistage Centrifugal in-line Pumps

Performance Curve

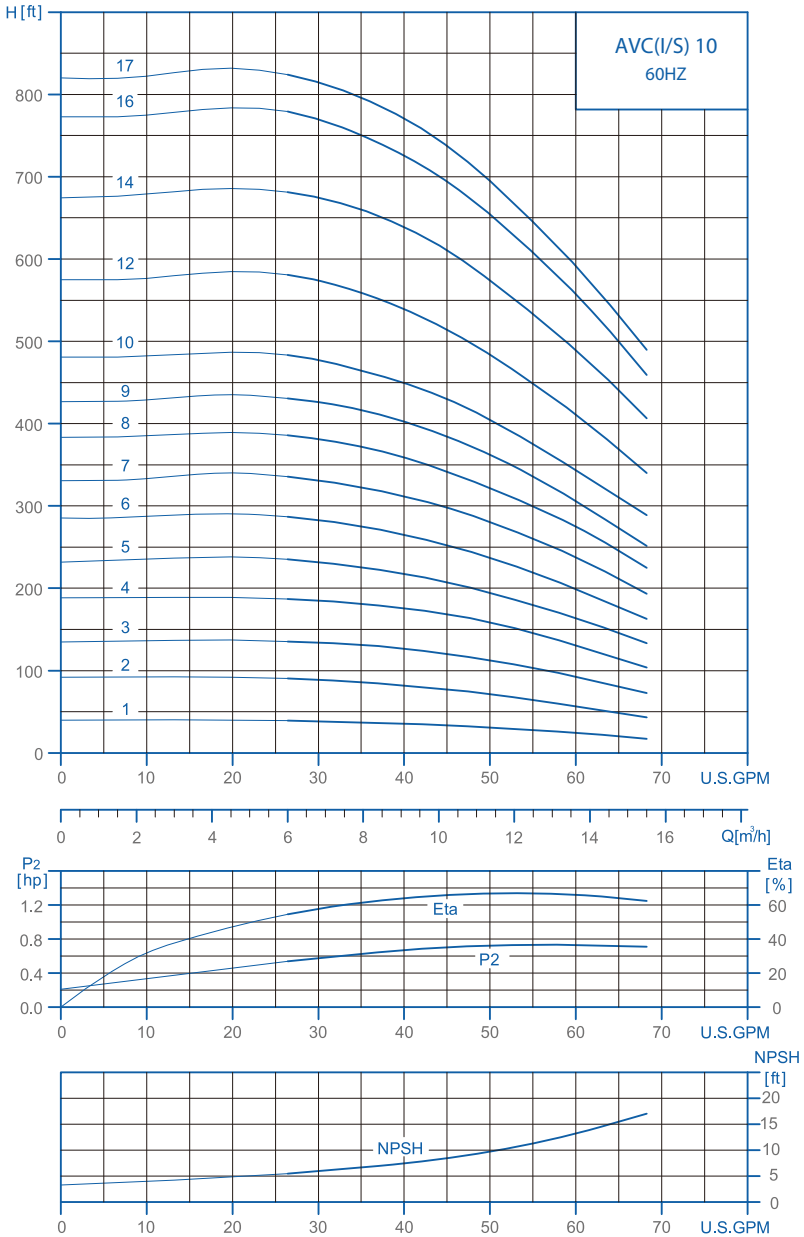

NEMA 60HZ
Vertical Multistage Centrifugal in-line Pumps

Dimensions & Weights AVC 10

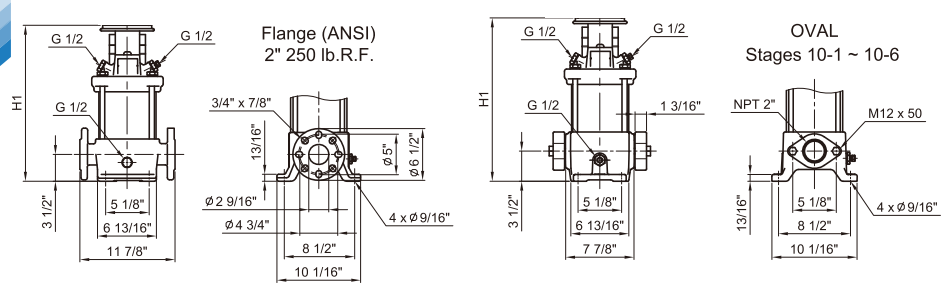

Pump type	Recommend motor of HP			AVC					
				NEMA Frame TEFC motors	NEMA Frame ODP motors	Dimension[inch]		Weights[lbs]	
	P_2					ANSI flange	OVAL	ANSI flange	OVAL
	[HP]	[kW]	[PH]			H1	H1		
AVC 10-1	3/4	0.55	1 / 3	56C	-	15.08	15.08	76	64
AVC 10-2	1 1/2	1.1	1 / 3	56C	-	15.08	15.08	77	65
AVC 10-3	3	2.2	1 / 3	182TC	-	17.2	17.2	93	81
AVC 10-4	3	2.2	1 / 3	182TC	-	18.39	18.39	95	83
AVC 10-5	5	3.7	1 / 3	182TC	-	19.57	19.57	97	85
AVC 10-6	5	3.7	1 / 3	182TC	-	20.75	20.75	99	87
AVC 10-7	5	3.7	1 / 3	182TC	-	21.31	-	101	-
AVC 10-8	7 1/2	5.5	1 / 3	213TC	-	23.68	-	111	-
AVC 10-9	7 1/2	5.5	1 / 3	213TC	-	24.86	-	113	-
AVC 10-10	7 1/2	5.5	1 / 3	213TC	-	26.04	-	115	-
AVC 10-12	10	7.5	1 / 3	213TC	-	28.4	-	120	-
AVC 10-14	10	7.5	1 / 3	213TC	-	30.07	-	124	-
AVC 10-16	15	11	3	254TC	254TC	35.75	-	138	-
AVC 10-17	15	11	3	254TC	254TC	36.93	-	140	-

* For the 5HP single phase TEFC motor, we provide 213TC Frame

NEMA 60HZ
Vertical Multistage Centrifugal in-line Pumps

Dimensions & Weights AVI/S 10

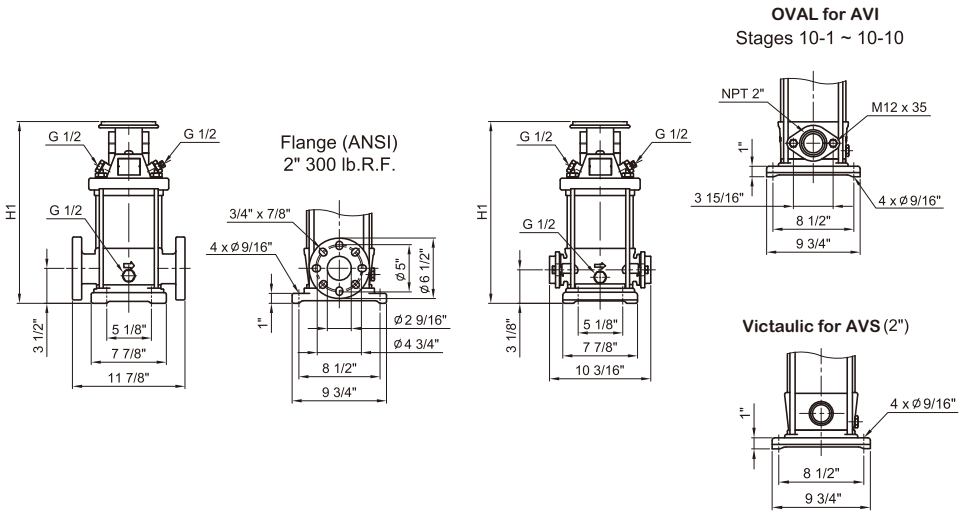

Pump type	Recommend motor of HP			AVI,AVS							
	P_2			NEMA Frame TEFC motors	NEMA Frame ODP motors	Dimension[inch]			Weights[lbs]		
	[HP]	[kW]	[PH]			ANSI flange	OVAL (AVI only)	Victaulic (AVS only)	ANSI flange	OVAL (AVI only)	Victaulic (AVS only)
						H1	H1	H1			
AVI,AVS 10-1	3/4	0.55	1 / 3	56C	-	14.96	14.53	14.53	60	56	58
AVI,AVS 10-2	1 1/2	1.1	1 / 3	56C	-	14.96	14.53	14.53	60	56	59
AVI,AVS 10-3	3	2.2	1 / 3	182TC	-	17.15	16.71	16.71	84	81	83
AVI,AVS 10-4	3	2.2	1 / 3	182TC	-	18.35	17.91	17.91	87	83	85
AVI,AVS 10-5	5	3.7	1 / 3	182TC	-	19.53	19.09	19.09	89	85	88
AVI,AVS 10-6	5	3.7	1 / 3	182TC	-	20.71	20.28	20.28	91	87	90
AVI,AVS 10-7	5	3.7	1 / 3	182TC	-	21.25	20.81	20.81	93	89	92
AVI,AVS 10-8	7 1/2	5.5	1 / 3	213TC	-	23.62	23.19	23.19	103	99	101
AVI,AVS 10-9	7 1/2	5.5	1 / 3	213TC	-	24.8	24.37	24.37	105	101	104
AVI,AVS 10-10	7 1/2	5.5	1 / 3	213TC	-	25.98	25.55	25.55	107	103	106
AVI,AVS 10-12	10	7.5	1 / 3	213TC	-	28.34	-	27.91	111	-	110
AVI,AVS 10-14	10	7·5	1 / 3	213TC	-	30.01	-	29.58	116	-	115
AVI,AVS 10-16	15	11	3	254TC	254TC	35.69	-	35.26	130	-	129
AVI,AVS 10-17	15	11	3	254TC	254TC	36.89	-	37.62	133	-	131

* For the 5HP single phase TEFC motor, we provide 213TC Frame

NEMA 60HZ
Vertical Multistage Centrifugal in-line Pumps

Performance Curve

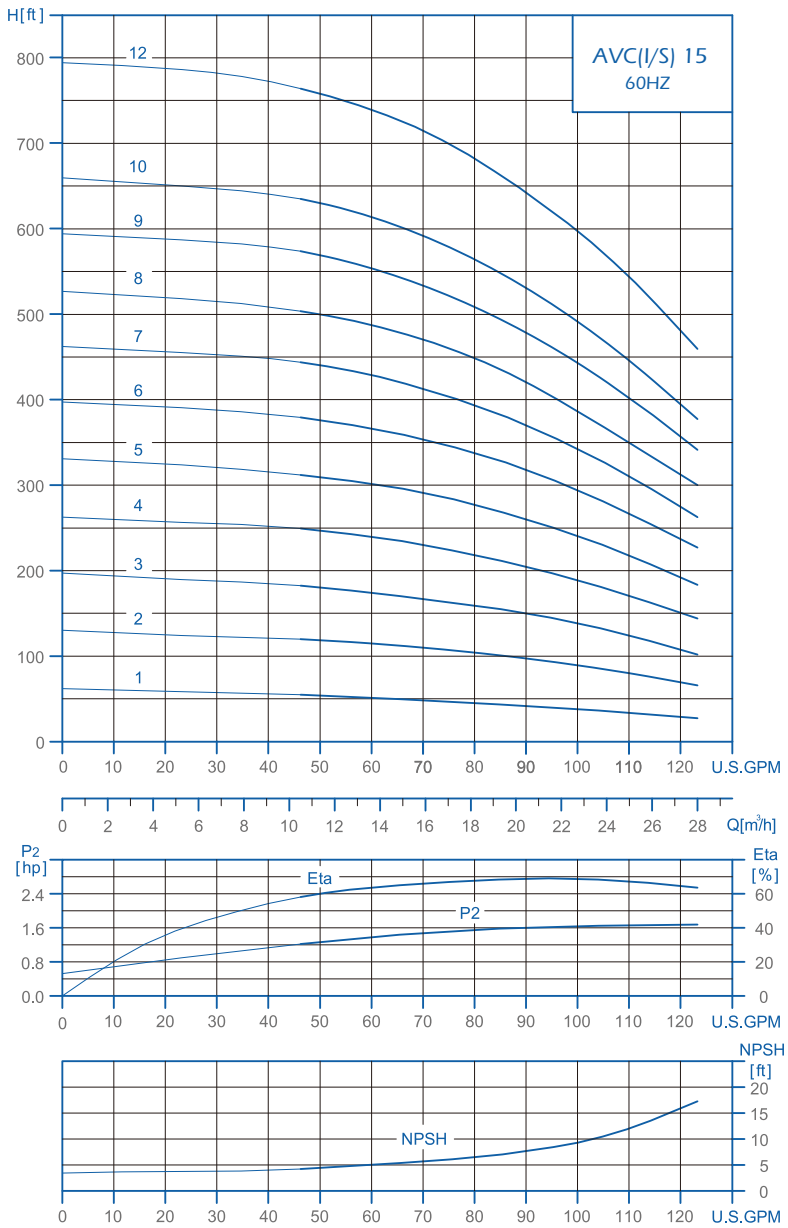

NEMA 60HZ
Vertical Multistage Centrifugal in-line Pumps

Dimensions & Weights AVC 15

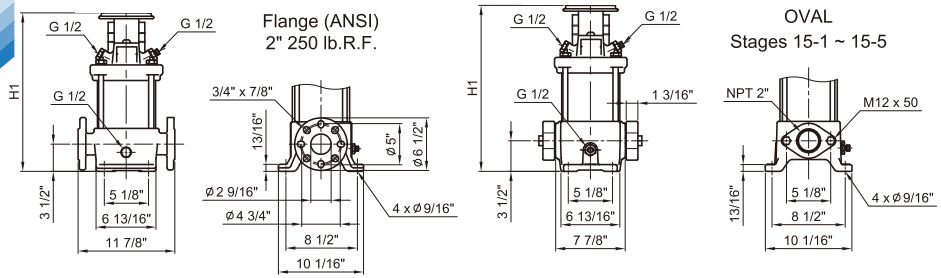

Pump type	Recommend motor of HP			AVC					
	P_2			NEMA Frame TEFC motors	NEMA Frame ODP motors	Dimension[inch]		Weights[lbs]	
						ANSI flange	OVAL	ANSI flange	OVAL
	[HP]	[kW]	[PH]			H1	H1		
AVC 15-1	2	1.5	1 / 3	56C	-	16.24	16.24	78	66
AVC 15-2	5	3.7	1 / 3	182TC	-	18.37	18.37	92	80
AVC 15-3	5	3.7	1 / 3	182TC	-	18.36	18.36	95	83
AVC 15-4	7 1/2	5.5	1 / 3	213TC	-	21.3	21.3	105	94
AVC 15-5	10	7.5	1 / 3	213TC	-	23.07	23.07	109	97
AVC 15-6	10	7.5	1 / 3	213TC	-	24.14	-	112	-
AVC 15-7	15	11	3	254TC	254TC	29.24	-	124	-
AVC 15-8	15	11	3	254TC	254TC	31.01	-	127	-
AVC 15-9	15	11	3	254TC	254TC	32.78	-	130	-
AVC 15-10	20	15	3	254TC	254TC	34.55	-	133	-
AVC 15-12	25	18.5	3	284TSC	284TSC	37.4	-	141	-

* For the 5HP single phase TEFC motor, we provide 213TC Frame

NEMA 60HZ
Vertical Multistage Centrifugal in-line Pumps

Dimensions & Weights AVI/S 15

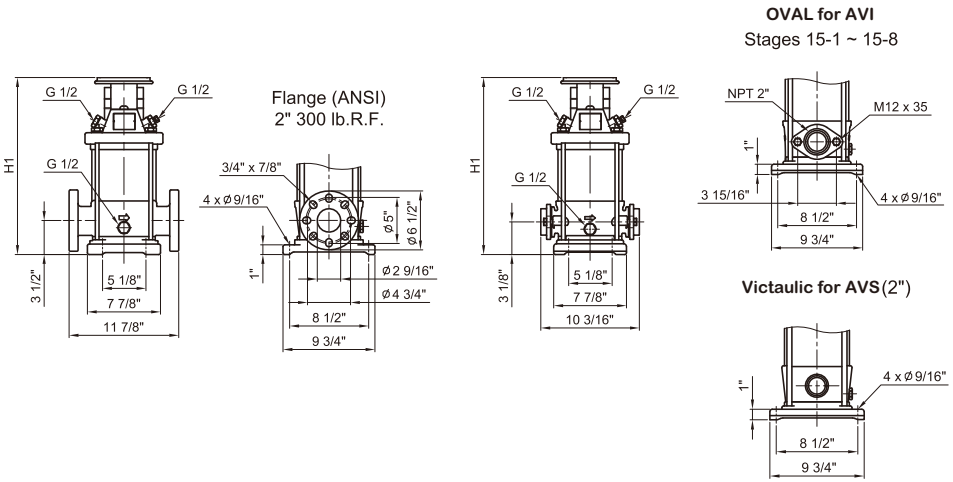

Pump type	Recommend motor of HP			AVI,AVS							
	P_2			NEMA Frame TEFC motors	NEMA Frame ODP motors	Dimension[inch]			Weights[lbs]		
						ANSI flange	OVAL (AVI only)	Victaulic (AVS only)	ANSI flange	OVAL (AVI only)	Victaulic (AVS only)
	[HP]	[kW]	[PH]			H1	H1	H1			
AVI,AVS 15-1	2	1.5	1 / 3	56C	-	16.1	15.71	15.71	61	59	60
AVI,AVS 15-2	5	3.7	1 / 3	182TC	-	17.13	16.73	16.73	84	80	83
AVI,AVS 15-3	5	3.7	1 / 3	182TC	-	18.3	17.9	17.9	87	83	86
AVI,AVS 15-4	7 1/2	5.5	1 / 3	213TC	-	21.22	20.82	20.82	97	93	96
AVI,AVS 15-5	10	7.5	1 / 3	213TC	-	22.99	22.59	22.59	100	96	99
AVI,AVS 15-6	10	7.5	1 / 3	213TC	-	24.07	23.67	23.67	103	100	102
AVI,AVS 15-7	15	11	3	254TC	254TC	29.16	28.76	28.76	116	112	115
AVI,AVS 15-8	15	11	3	254TC	254TC	30.93	30.54	30.54	119	116	118
AVI,AVS 15-9	15	11	3	254TC	254TC	32.7	-	32.31	123	-	121
AVI,AVS 15-10	20	15	3	254TC	254TC	34.47	-	34.08	126	-	124
AVI,AVS 15-12	25	18.5	3	284TSC	284TSC	37.26	-	36.87	126	-	125

* For the 5HP single phase TEFC motor, we provide 213TC Frame

All technical information is subject to change without notice.

NEMA 60HZ
Vertical Multistage Centrifugal in-line Pumps

Performance Curve

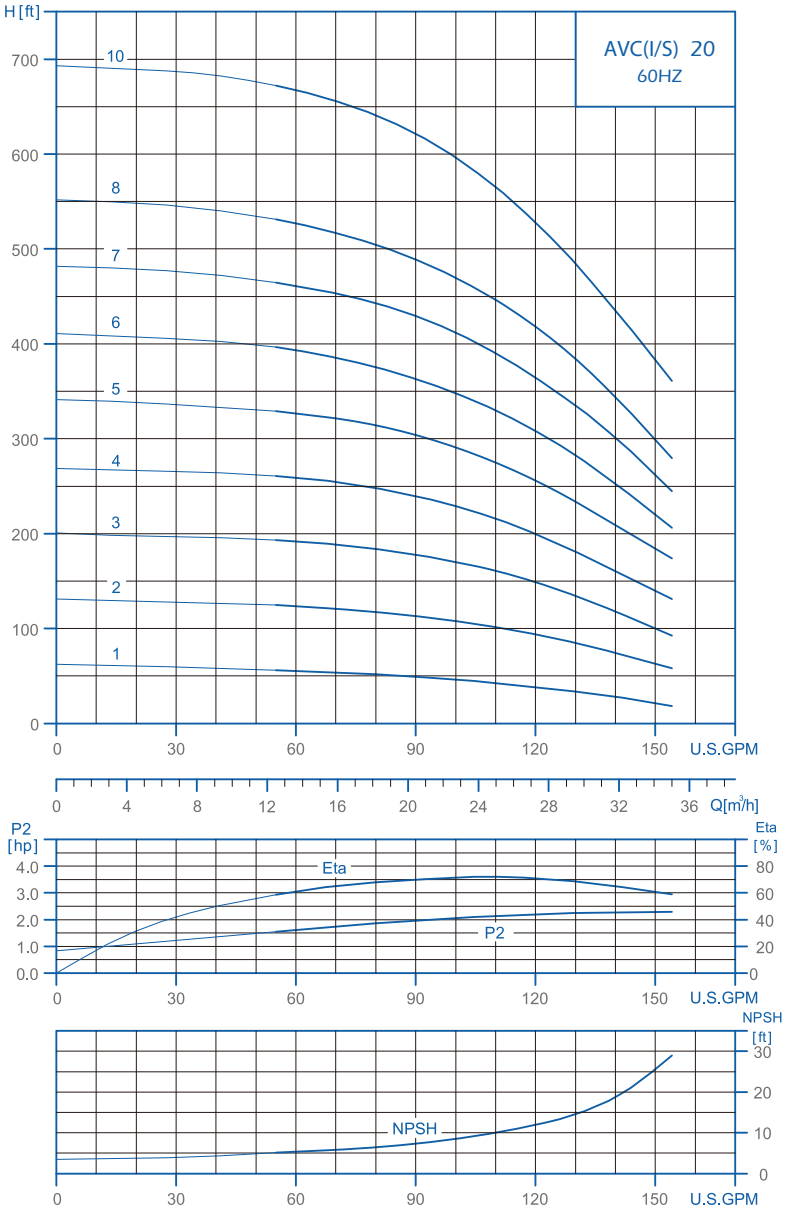

NEMA 60HZ
Vertical Multistage Centrifugal in-line Pumps

Dimensions & Weights AVC 20

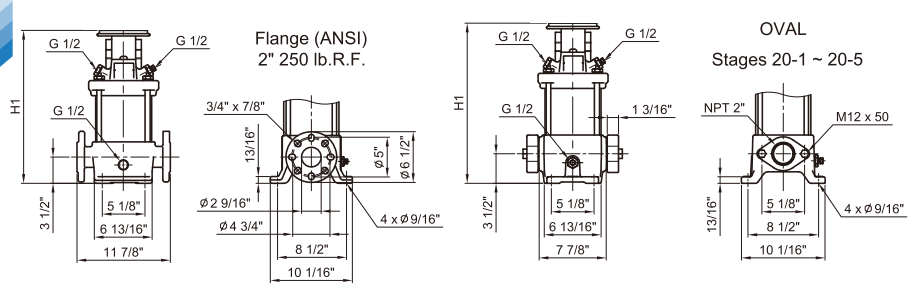

Pump type	Recommend motor of HP			AVC					
				NEMA Frame TEFC motors	NEMA Frame ODP motors	Dimension[inch]		Weights[lbs]	
	P_2					ANSI flange	OVAL	ANSI flange	OVAL
	[HP]	[kW]	[PH]			H1	H1		
AVC 20-1	3	2.2	1 / 3	182TC	-	17.19	17.19	92	80
AVC 20-2	5	3.7	1 / 3	182TC	-	17.19	17.19	92	80
AVC 20-3	7 1/2	5.5	1 / 3	213TC	-	19.52	19.52	102	91
AVC 20-4	10	7.5	1 / 3	213TC	-	21.3	21.3	105	94
AVC 20-5	15	11	3	254TC	254TC	25.69	25.69	118	106
AVC 20-6	15	11	3	254TC	254TC	27.46	27.46	121	109
AVC 20-7	20	15	3	254TC	254TC	29.24	29.24	124	112
AVC 20-8	20	15	3	254TC	254TC	31.01	-	127	-
AVC 20-10	25	18.5	3	284TSC	284TSC	33.86	-	135	-

* For the 5HP single phase TEFC motor, we provide 213TC Frame

All technical information is subject to change without notice.

NEMA 60HZ
Vertical Multistage Centrifugal in-line Pumps

Dimensions & Weights AVI/S 20

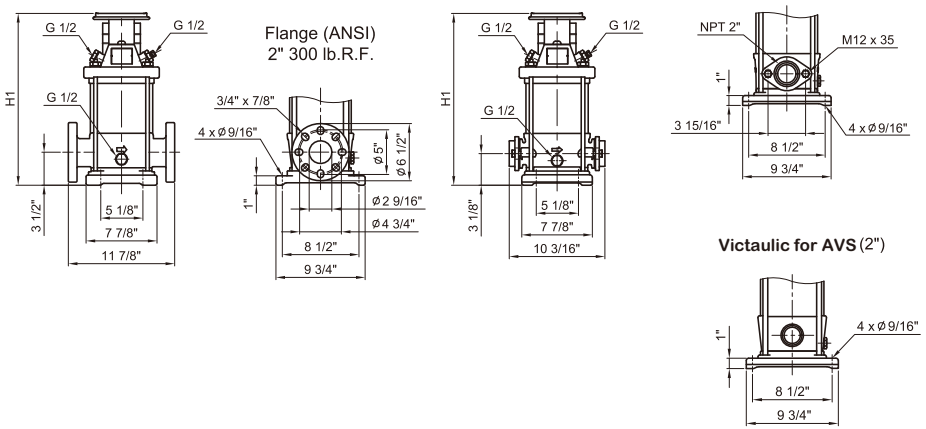

Pump type	Recommend motor of HP			AVI,AVS							
	P_2			NEMA Frame TEFC motors	NEMA Frame ODP motors	Dimension[inch]			Weights[lbs]		
	[HP]	[kW]	[PH]			ANSI flange	OVAL (AVI only)	Victaulic (AVS only)	ANSI flange	OVAL (AVI only)	Victaulic (AVS only)
						H1	H1	H1			
AVI,AVS 20-1	3	2.2	1 / 3	182TC	-	17.19	16.79	16.79	83	80	86
AVI,AVS 20-2	5	3.7	1 / 3	182TC	-	17.2	16.81	16.81	84	80	83
AVI,AVS 20-3	7 1/2	5.5	1 / 3	213TC	-	19.52	19.13	19.13	94	90	93
AVI,AVS 20-4	10	7.5	1 / 3	213TC	-	21.3	20.9	20.9	97	93	96
AVI,AVS 20-5	15	11	3	254TC	254TC	25.69	25.3	25.3	110	106	109
AVI,AVS 20-6	15	11	3	254TC	254TC	27.46	27.07	27.07	113	109	112
AVI,AVS 20-7	20	15	3	254TC	254TC	29.24	28.84	28.84	116	113	115
AVI,AVS 20-8	20	15	3	254TC	254TC	31.01	-	30.61	119	-	118
AVI,AVS 20-10	25	18.5	3	284TSC	284TSC	33.8	-	33.41	120	-	119

* For the 5HP single phase TEFC motor, we provide 213TC Frame

NEMA 60HZ
Vertical Multistage Centrifugal in-line Pumps

Performance Curve

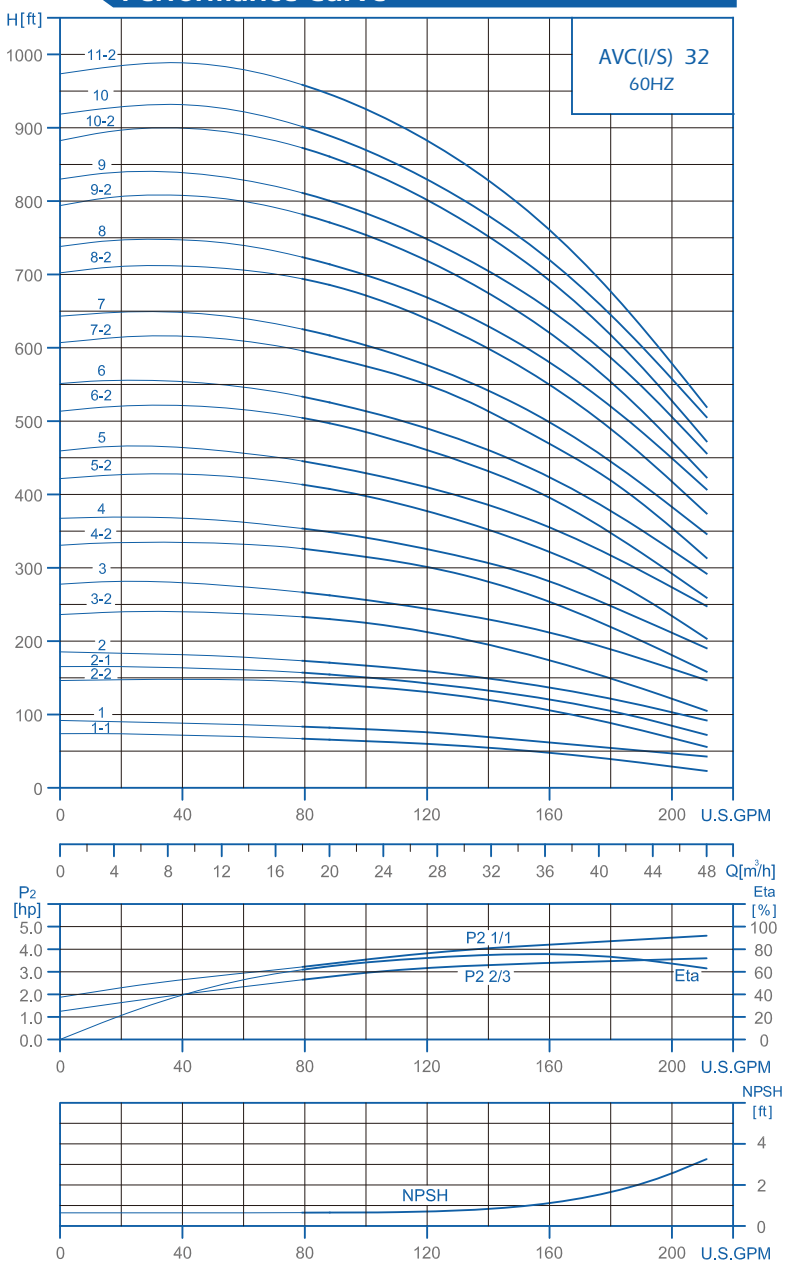

NEMA 60HZ
Vertical Multistage Centrifugal in-line Pumps

Dimensions & Weights AVC 32

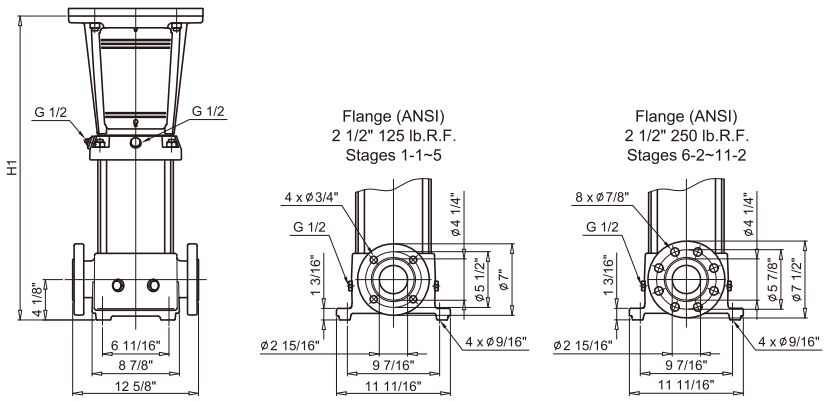

Pump type	Recommend motor of HP			AVC			
	P_2			NEMA Frame TEFC motors	NEMA Frame ODP motors	Dimension [inch]	Weights[lbs]
	[HP]	[kW]	[PH]			ANSI flange H1	ANSI flange
AVC 32-1-1	3	2.2	1 / 3	182TC	-	20.02	120.66
AVC 32-1	5	3.7	1 / 3	182TC	-	20.02	120.75
AVC 32-2-1	7 1/2	5.5	1 / 3	213TC	-	22.78	127.18
AVC 32-2-1	7 1/2	5.5	1 / 3	213TC	-	22.78	127.40
AVC 32-2	7 1/2	5.5	1 / 3	213TC	-	22.78	127.40
AVC 32-3-2	10	7.5	1 / 3	213TC	-	25.53	133.83
AVC 32-3	15	11	3	254TC	254TC	29.67	155.18
AVC 32-4-2	15	11	3	254TC	254TC	32.42	161.78
AVC 32-4	15	11	3	254TC	254TC	32.42	161.78
AVC 32-5-2	20	15	3	254TC	254TC	35.18	168.39
AVC 32-5	20	15	3	254TC	254TC	35.18	168.39
AVC 32-6-2	25	18.5	3	284TSC	284TSC	37.93	177.17
AVC 32-6	25	18.5	3	284TSC	284TSC	37.93	177.17
AVC 32-7-2	30	22	3	286TSC	284TSC	40.69	183.87
AVC 32-7	30	22	3	286TSC	284TSC	40.69	183.87
AVC 32-8-2	30	22	3	286TSC	284TSC	43.44	190.83
AVC 32-8	40	30	3	286TSC	286TSC	43.44	190.83
AVC 32-9-2	40	30	3	286TSC	286TSC	46.20	196.77
AVC 32-9	40	30	3	286TSC	286TSC	46.20	196.77
AVC 32-10-2	40	30	3	286TSC	286TSC	48.96	202.50
AVC 32-10	40	30	3	286TSC	286TSC	48.96	202.50
AVC 32-11-2	40	30	3	286TSC	286TSC	51.71	208.45

* For the 5HP single phase TEFC motor, we provide 213TC Frame

NEMA 60HZ
Vertical Multistage Centrifugal in-line Pumps

Dimensions & Weights AVI/S-32

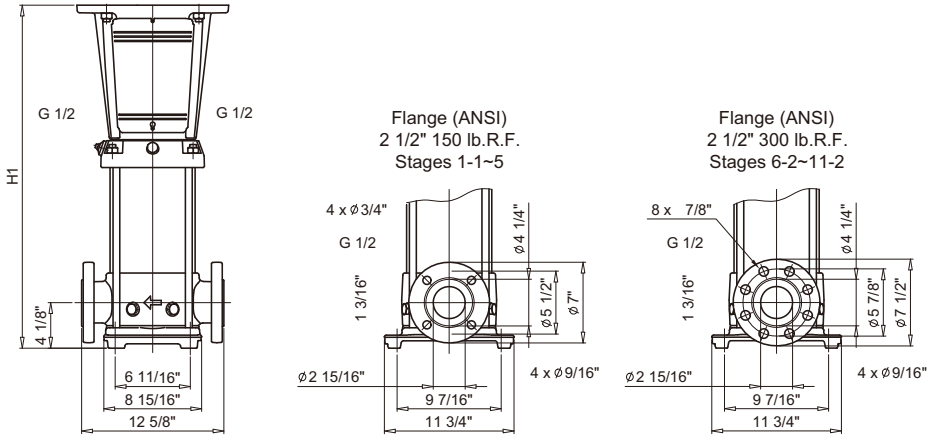

Pump type	Recommend motor of HP			AVI,AVS			
	P_2			NEMA Frame TEFC motors	NEMA Frame ODP motors	Dimension [inch]	Weights[lbs]
	[HP]	[kW]	[PH]			ANSI flange H1	ANSI flange
AVI,AVS 32-1-1	3.0	2.2	1 / 3	182TC	-	20.02	109.96
AVI,AVS 32-1	5.0	3.7	1 / 3	182TC	-	20.02	109.96
AVI,AVS 32-2-2	7 1/2	5.5	1 / 3	213TC	-	22.78	116.61
AVI,AVS 32-2-1	7 1/2	5.5	1 / 3	213TC	-	22.78	116.61
AVI,AVS 32-2	7 1/2	5.5	1 / 3	213TC	-	22.78	116.61
AVI,AVS 32-3-2	10.0	7.5	1 / 3	213TC	-	25.53	123.26
AVI,AVS 32-3	15.0	11	3	254TC	254TC	29.67	144.38
AVI,AVS 32-4-2	15.0	11	3	254TC	254TC	32.42	150.99
AVI,AVS 32-4	15.0	11	3	254TC	254TC	32.42	150.99
AVI,AVS 32-5-2	20.0	15	3	254TC	254TC	35.18	157.60
AVI,AVS 32-5	20.0	15	3	254TC	254TC	35.18	157.82
AVI,AVS 32-6-2	25.0	18.5	3	284TSC	284TSC	37.93	166.38
AVI,AVS 32-6	25.0	18.5	3	284TSC	284TSC	37.93	166.60
AVI,AVS 32-7-2	30.0	22	3	286TSC	284TSC	40.69	173.07
AVI,AVS 32-7	30.0	22	3	286TSC	284TSC	40.69	173.29
AVI,AVS 32-8-2	30.0	22	3	286TSC	284TSC	43.44	180.25
AVI,AVS 32-8	40.0	30	3	286TSC	286TSC	43.44	180.25
AVI,AVS 32-9-2	40.0	30	3	286TSC	286TSC	46.20	185.98
AVI,AVS 32-9	40.0	30	3	286TSC	286TSC	46.20	186.20
AVI,AVS 32-10-2	40.0	30	3	286TSC	286TSC	48.96	191.71
AVI,AVS 32-10	40.0	30	3	286TSC	286TSC	48.96	191.71
AVI,AVS 32-11-2	40.0	30	3	286TSC	286TSC	51.71	197.65

* For the 5HP single phase TEFC motor, we provide 213TC Frame

NEMA 60HZ
Vertical Multistage Centrifugal in-line Pumps

Performance Curve

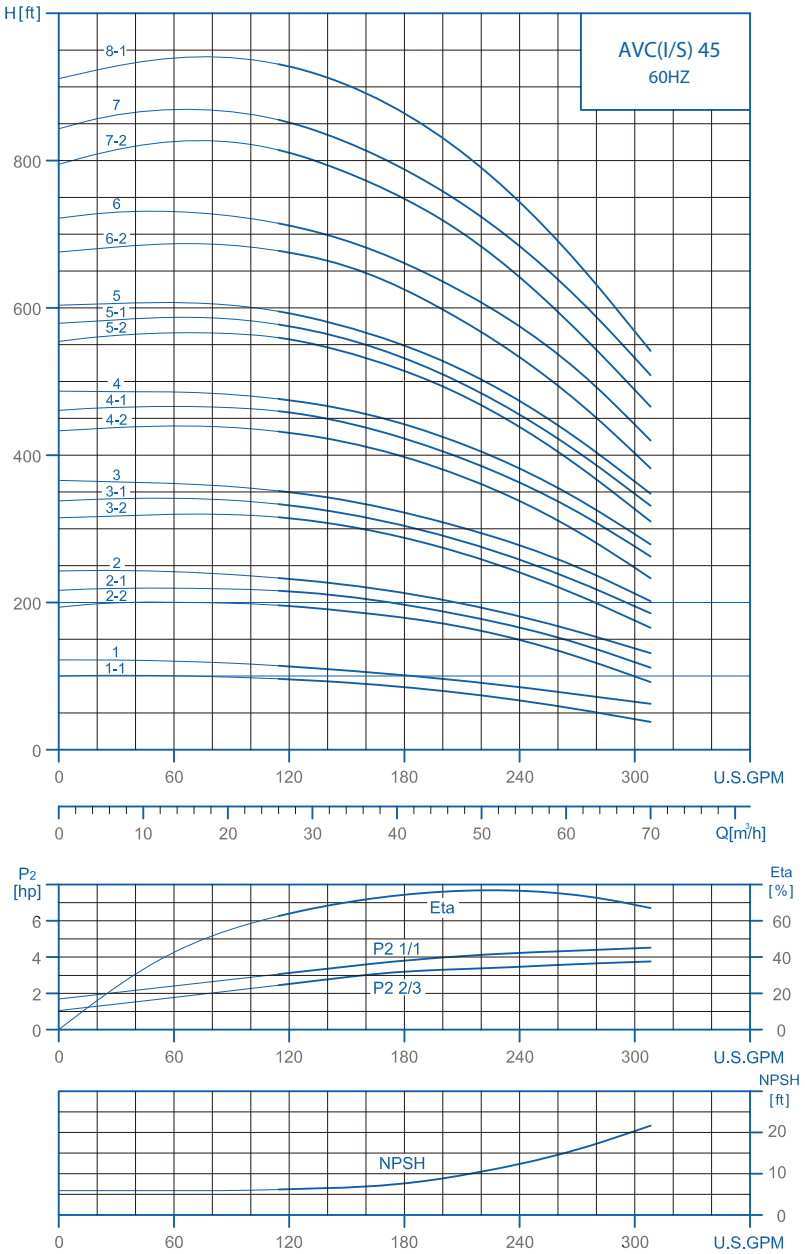

NEMA 60HZ
Vertical Multistage Centrifugal in-line Pumps

Dimensions & Weights AVC 45

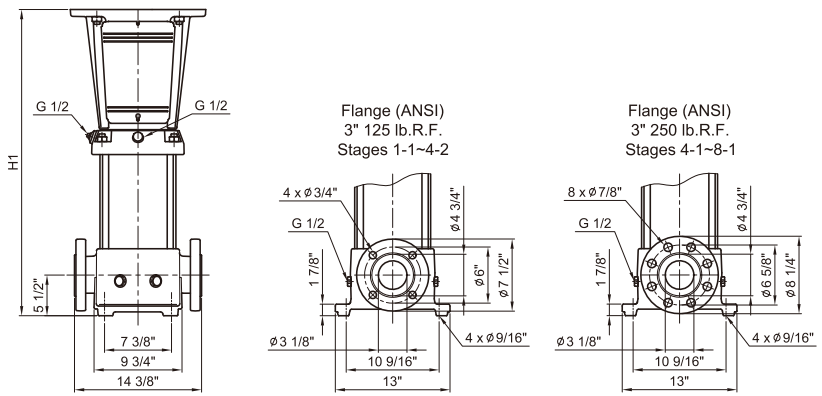

Pump type	Recommend motor of HP			AVC			
	P_2			NEMA Frame TEFC motors	NEMA Frame ODP motors	Dimension [inch]	Weights[lbs]
	[HP]	[kW]	[PH]			ANSI flange H1	ANSI flange
AVC 45-1-1	7 1/2	5.5	1 / 3	213TC	-	22.26	143.41
AVC 45-1	7 1/2	5.5	1 / 3	213TC	-	22.26	143.44
AVC45-2-2	15	11	3	254TC	254TC	29.55	172.60
AVC 45-2-1	15	11	3	254TC	254TC	29.55	172.62
AVC 45-2	15	11	3	254TC	254TC	29.55	172.64
AVC 45-3-2	20	15	3	254TC	254TC	32.70	180.68
AVC 45-3-1	25	18.5	3	284TSC	284TSC	32.70	182.87
AVC 45-3	25	18.5	3	284TSC	284TSC	32.70	182.90
AVC 45-4-2	30	22	3	286TSC	284TSC	35.85	190.94
AVC 45-4-1	30	22	3	286TSC	284TSC	35.85	190.96
AVC 45-4	30	22	3	286TSC	284TSC	35.85	190.98
AVC 45-5-2	40	30	3	286TSC	286TSC	39.00	199.02
AVC 45-5-1	40	30	3	286TSC	286TSC	39.00	199.04
AVC 45-5	40	30	3	286TSC	286TSC	39.00	199.06
AVC 45-6-2	50	37	3	326TSC	324TSC	42.15	224.55
AVC 45-6	50	37	3	326TSC	324TSC	42.15	224.59
AVC 45-7-2	50	37	3	326TSC	324TSC	45.30	232.63
AVC 45-7	60	45	3	364TSC	324TSC	45.30	232.67
AVC 45-8-1	60	45	3	364TSC	324TSC	48.44	239.79

NEMA 60HZ
Vertical Multistage Centrifugal in-line Pumps

Dimensions & Weights AVI/S 45

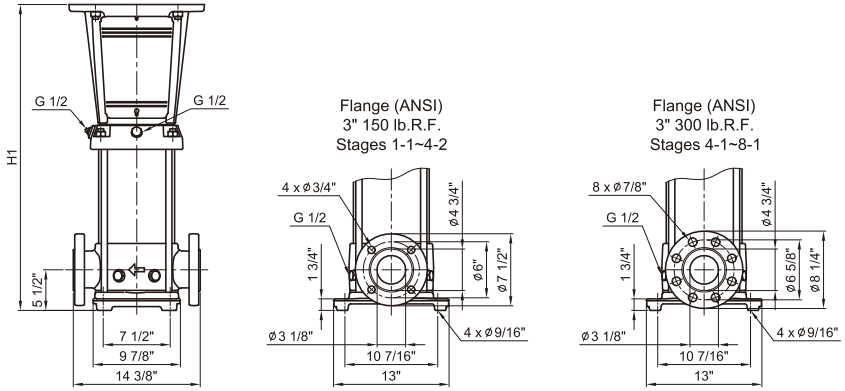

Pump type	Recommend motor of HP			AVI,AVS			
	P_2			NEMA Frame TEFC motors	NEMA Frame ODP motors	Dimension [inch]	Weights[lbs]
	[HP]	[kW]	[PH]			ANSI flange H1	ANSI flange
AVI,AVS 45-1-1	7 1/2	5.5	1 / 3	213TC	-	22.20	124.60
AVI,AVS 45-1	7 1/2	5.5	1 / 3	213TC	-	22.20	124.63
AVI,AVS 45-2-2	15	11	3	254TC	254TC	29.49	153.79
AVI,AVS 45-2-1	15	11	3	254TC	254TC	29.49	153.81
AVI,AVS 45-2	15	11	3	254TC	254TC	29.49	153.83
AVI,AVS 45-3-2	20	15	3	254TC	254TC	32.64	161.87
AVI,AVS 45-3-1	25	18.5	3	284TSC	284TSC	32.64	164.06
AVI,AVS 45-3	25	18.5	3	284TSC	284TSC	32.64	164.09
AVI,AVS 45-4-2	30	22	3	286TSC	284TSC	35.79	172.13
AVI,AVS 45-4-1	30	22	3	286TSC	284TSC	35.79	172.15
AVI,AVS 45-4	30	22	3	286TSC	284TSC	35.79	172.17
AVI,AVS 45-5-2	40	30	3	286TSC	286TSC	38.94	180.21
AVI,AVS 45-5-1	40	30	3	286TSC	286TSC	38.94	180.23
AVI,AVS 45-5	40	30	3	286TSC	286TSC	38.94	180.25
AVI,AVS 45-6-2	50	37	3	326TSC	324TSC	42.09	205.74
AVI,AVS 45-6	50	37	3	326TSC	324TSC	42.09	205.78
AVI,AVS 45-7-2	50	37	3	326TSC	324TSC	45.24	213.82
AVI,AVS 45-7	60	45	3	364TSC	324TSC	45.24	213.86
AVI,AVS 45-8-1	60	45	3	364TSC	324TSC	48.39	220.98

All technical information is subject to change without notice.

NEMA 60HZ
Vertical Multistage Centrifugal in-line Pumps

Performance Curve

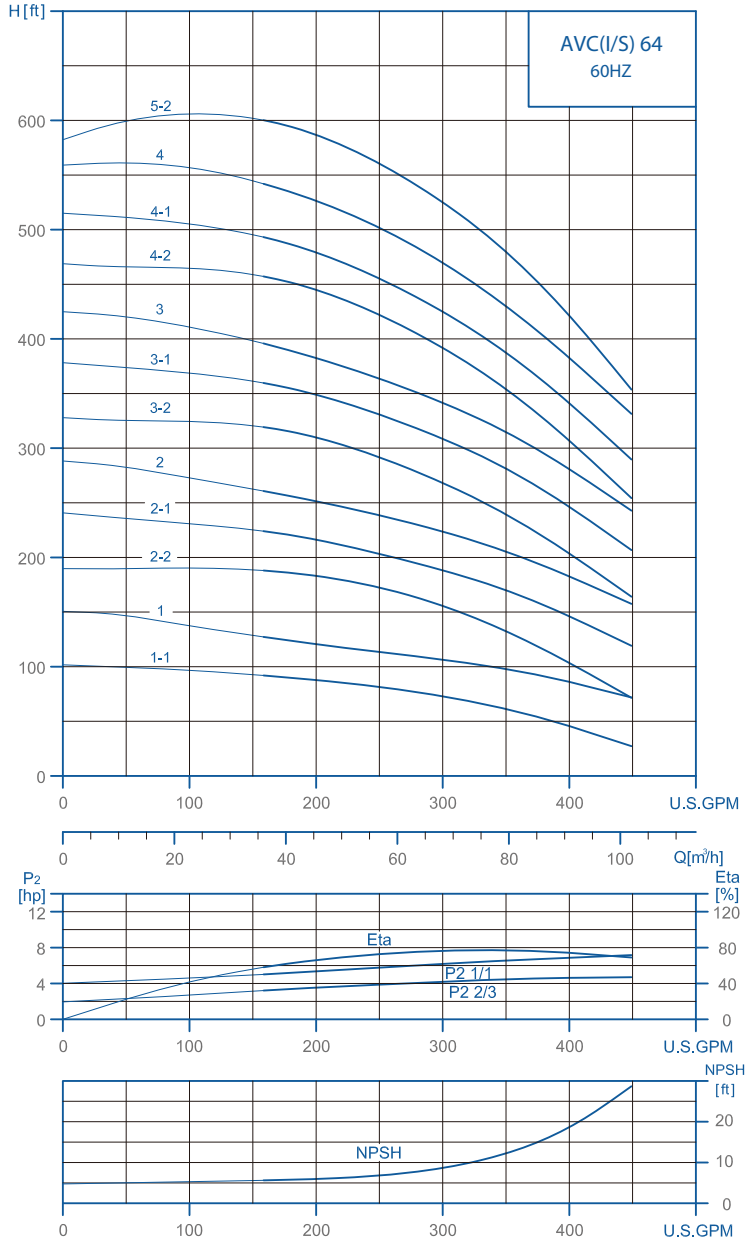

NEMA 60HZ
Vertical Multistage Centrifugal in-line Pumps

Dimensions & Weights AVC 64

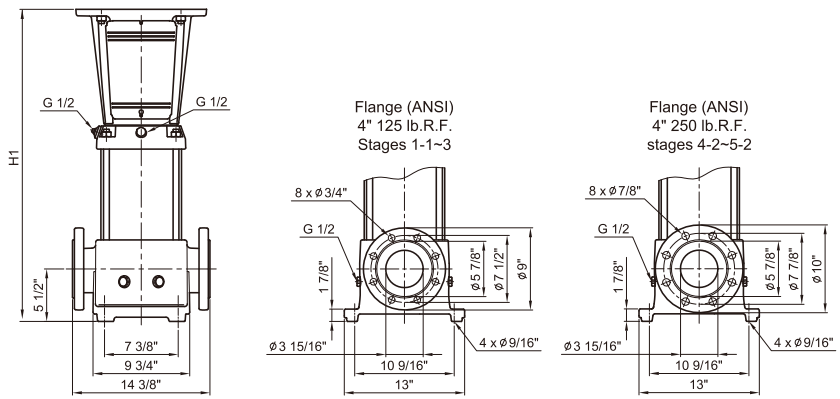

Pump type	Recommend motor of HP			AVC			
	P_2			NEMA Frame TEFC motors	NEMA Frame ODP motors	Dimension [inch]	Weights[lbs]
						ANSI flange	ANSI flange
	[HP]	[kW]	[PH]			H1	
AVC 64-1-1	7 1/2	5.5	1 / 3	213TC	-	22.36	130.13
AVC 64-1	15	11	3	254TC	254TC	26.50	151.26
AVC64-2-2	15	11	3	254TC	254TC	29.74	159.93
AVC 64-2-1	20	15	3	254TC	254TC	29.74	159.93
AVC 64-2	25	18.5	3	284TSC	284TSC	29.74	162.10
AVC 64-3-2	30	22	3	286TSC	284TSC	32.99	171.93
AVC 64-3-1	40	30	3	286TSC	286TSC	32.99	171.93
AVC 64-3	40	30	3	286TSC	286TSC	32.99	171.93
AVC 64-4-2	40	30	3	286TSC	286TSC	36.24	180.52
AVC 64-4-1	50	37	3	326TSC	324TSC	36.24	197.96
AVC 64-4	50	37	3	326TSC	324TSC	36.24	198.18
AVC 64-5-2	60	45	3	364TSC	324TSC	39.49	206.57

NEMA 60HZ
Vertical Multistage Centrifugal in-line Pumps

Dimensions & Weights AVI/S 64

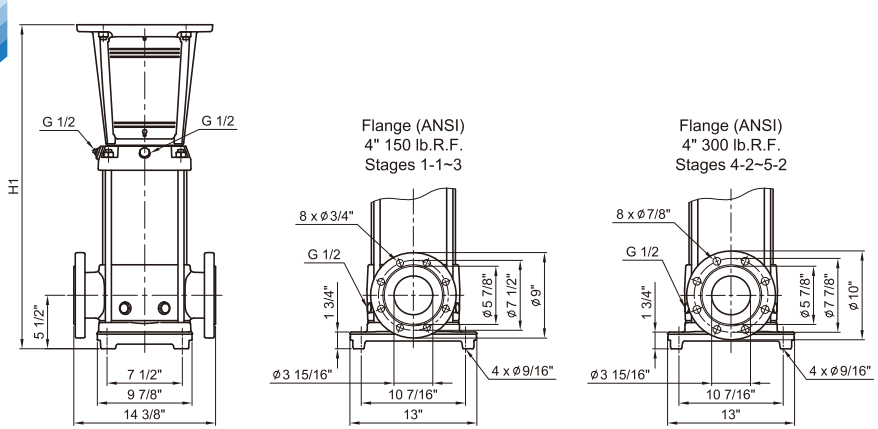

Pump type	Recommend motor of HP			AVI,AVS			
	P_2			NEMA Frame TEFC motors	NEMA Frame ODP motors	Dimension [inch]	Weights[lbs]
						ANSI flange	ANSI flange
	[HP]	[kW]	[PH]			H1	
AVI,S 64-1-1	7 1/2	5.5	1 / 3	213TC	-	22.36	115.11
AVI,S 64-1	15	11	3	254TC	254TC	26.50	136.23
AVI,S 64-2-2	15	11	3	254TC	254TC	29.74	144.89
AVI,S 64-2-1	20	15	3	254TC	254TC	29.74	144.89
AVI,S 64-2	25	18.5	3	284TSC	284TSC	29.74	147.06
AVI,S 64-3-2	30	22	3	286TSC	284TSC	32.99	155.89
AVI,S 64-3-1	40	30	3	286TSC	286TSC	32.99	155.89
AVI,S 64-3	40	30	3	286TSC	286TSC	32.99	155.89
AVI,S 64-4-2	40	30	3	286TSC	286TSC	36.24	164.42
AVI,S 64-4-1	50	37	3	326TSC	324TSC	36.24	181.86
AVI,S 64-4	50	37	3	326TSC	324TSC	36.24	181.86
AVI,S 64-5-2	60	45	3	364TSC	324TSC	39.49	181.59

NEMA 60HZ
Vertical Multistage Centrifugal in-line Pumps

Performance Curve

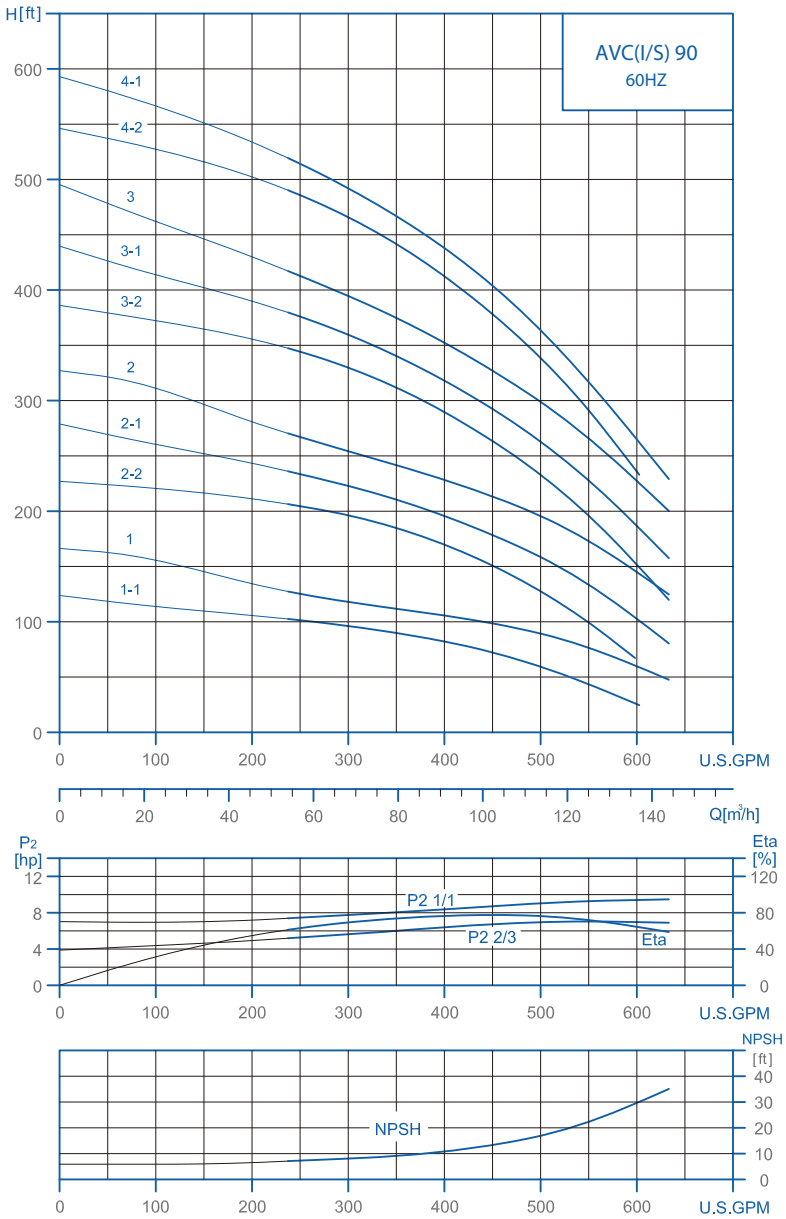

NEMA 60HZ
Vertical Multistage Centrifugal in-line Pumps

Dimensions & Weights AVC 90

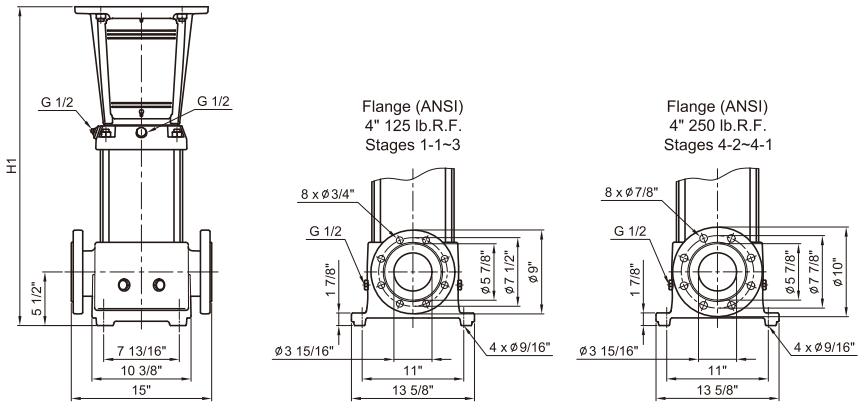

Pump type	Recommend motor of HP			AVC			
	P_2			NEMA Frame TEFC motors	NEMA Frame ODP motors	Dimension [inch]	Weights[lbs]
	[HP]	[kW]	[PH]			ANSI flange H1	ANSI flange
AVC 90-1-1	15	11	3	254TC	254TC	26.60	180.81
AVC 90-1	15	11	3	254TC	254TC	26.60	180.86
AVC 90-2-2	25	18.5	3	284TSC	284TSC	30.19	194.39
AVC 90-2-1	30	22	3	286TSC	284TSC	30.19	194.44
AVC 90-2	40	30	3	286TSC	286TSC	30.19	194.48
AVC 90-3-2	40	30	3	286TSC	286TSC	33.77	205.67
AVC 90-3-1	50	37	3	326TSC	324TSC	33.77	223.16
AVC 90-3	50	37	3	326TSC	324TSC	33.77	223.20
AVC 90-4-2	60	45	3	364TSC	324TSC	37.21	238.49
AVC 90-4-1	60	45	3	364TSC	324TSC	37.21	238.93

NEMA 60HZ
Vertical Multistage Centrifugal in-line Pumps

Dimensions & Weights AVI/S 90

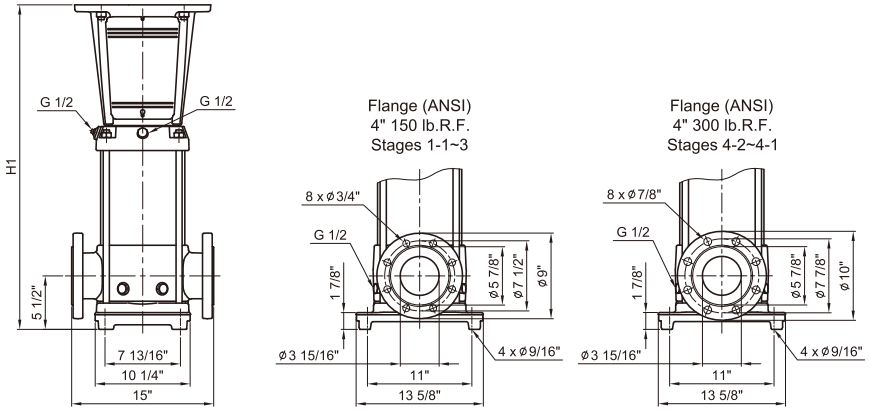

Pump type	Recommend motor of HP			AVI,AVS			
	P_2			NEMA Frame TEFC motors	NEMA Frame ODP motors	Dimension [inch]	Weights[lbs]
						ANSI flange	ANSI flange
	[HP]	[kW]	[PH]			H1	
AVI,AVS 90-1-1	15	11	3	254TC	254TC	26.75	159.32
AVI,AVS 90-1	15	11	3	254TC	254TC	26.75	159.36
AVI,AVS 90-2-2	25	18.5	3	284TSC	284TSC	30.34	172.59
AVI,AVS 90-2-1	30	22	3	286TSC	284TSC	30.34	172.63
AVI,AVS 90-2	40	30	3	286TSC	286TSC	30.34	172.68
AVI,AVS 90-3-2	40	30	3	286TSC	286TSC	33.93	183.78
AVI,AVS 90-3-1	50	37	3	326TSC	324TSC	33.93	201.26
AVI,AVS 90-3	50	37	3	326TSC	324TSC	33.93	201.31
AVI,AVS 90-4-2	60	45	3	364TSC	324TSC	37.36	216.24
AVI,AVS 90-4-1	60	45	3	364TSC	324TSC	37.36	216.62

NEMA 60HZ
Vertical Multistage Centrifugal in-line Pumps

Performance Curve

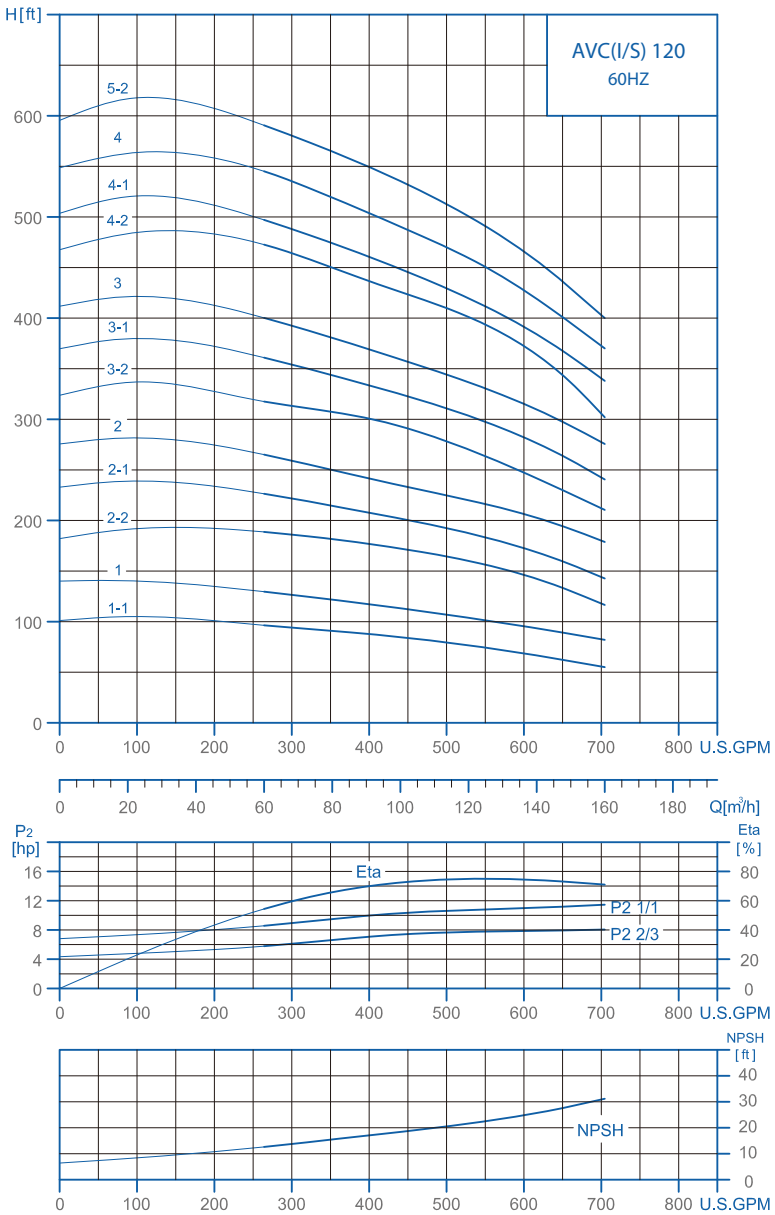

NEMA 60HZ
Vertical Multistage Centrifugal in-line Pumps

Dimensions & Weights AVC 120

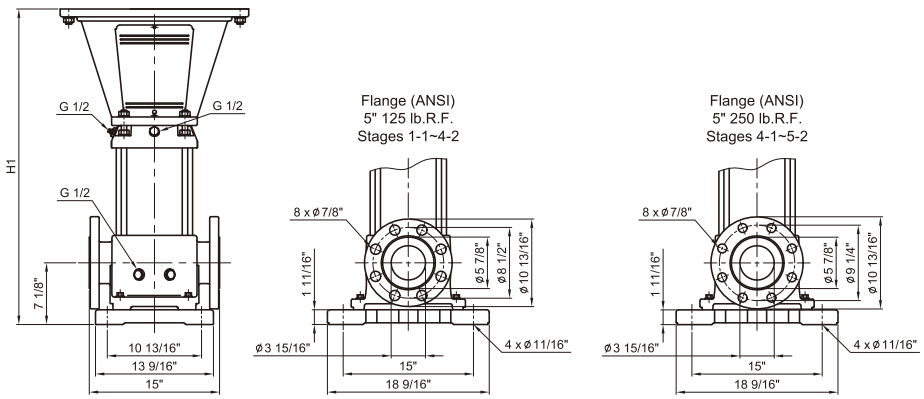

Pump type	Recommend motor of HP			AVC			
	P_2			NEMA Frame TEFC motors	NEMA Frame ODP motors	Dimension [inch]	Weights[lbs]
	[HP]	[kW]	[PH]			ANSI flange H1	ANSI flange
AVC 120-1-1	20	15	3	254TC	254TC	32.83	246.94
AVC 120-1	25	18.5	3	284TSC	284TSC	32.83	249.28
AVC 120-2-2	40	30	3	286TSC	286TSC	38.96	270.58
AVC 120-2-1	40	30	3	286TSC	286TSC	38.96	270.80
AVC 120-2	50	37	3	326TSC	324TSC	38.96	288.38
AVC 120-3-2	60	45	3	364TSC	324TSC	45.08	309.44
AVC 120-3-1	60	45	3	364TSC	324TSC	45.08	309.61
AVC 120-3	75	55	3	365TSC	364TSC	45.55	364.28
AVC 120-4-2	75	55	3	365TSC	364TSC	51.67	385.32
AVC 120-4-1	100	75	3	405TSC	365TSC	51.67	385.49
AVC 120-4	100	75	3	405TSC	365TSC	51.67	385.67
AVC 120-5-2	100	75	3	405TSC	365TSC	57.80	407.01

NEMA 60HZ
Vertical Multistage Centrifugal in-line Pumps

Dimensions & Weights AVI/S 120

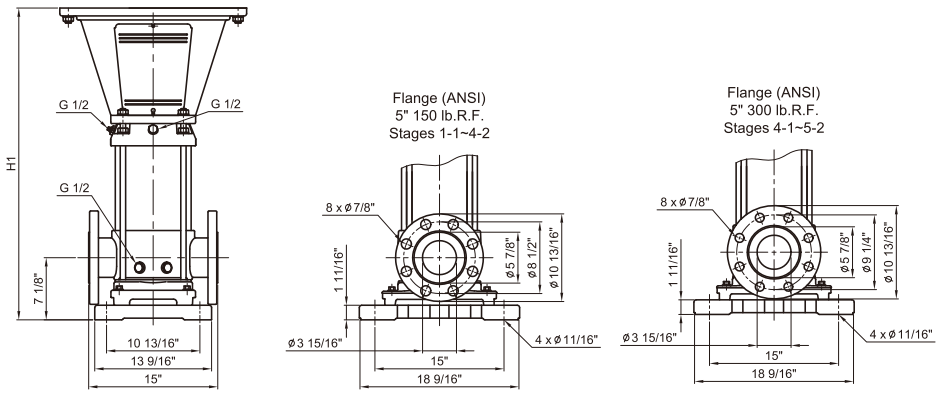

Pump type	Recommend motor of HP			AVI,AVS			
	P_2			NEMA Frame TEFC motors	NEMA Frame ODP motors	Dimension [inch]	Weights[lbs]
	[HP]	[kW]	[PH]			ANSI flange H1	ANSI flange
AVI,AVS 120-1-1	20	15	3	254TC	254TC	32.95	204.36
AVI,AVS 120-1	25	18.5	3	284TSC	284TSC	32.95	206.71
AVI,AVS 120-2-2	40	30	3	286TSC	286TSC	39.07	237.10
AVI,AVS 120-2-1	40	30	3	286TSC	286TSC	39.07	237.32
AVI,AVS 120-2	50	37	3	326TSC	324TSC	39.07	254.99
AVI,AVS 120-3-2	60	45	3	364TSC	324TSC	45.20	276.18
AVI,AVS 120-3-1	60	45	3	364TSC	324TSC	45.20	276.35
AVI,AVS 120-3	75	55	3	365TSC	364TSC	45.67	331.35
AVI,AVS 120-4-2	75	55	3	365TSC	364TSC	51.79	352.87
AVI,AVS 120-4-1	100	75	3	405TSC	365TSC	51.79	353.05
AVI,AVS 120-4	100	75	3	405TSC	365TSC	51.79	353.22
AVI,AVS 120-5-2	100	75	3	405TSC	365TSC	57.91	374.48

NEMA 60HZ
Vertical Multistage Centrifugal in-line Pumps

Performance Curve

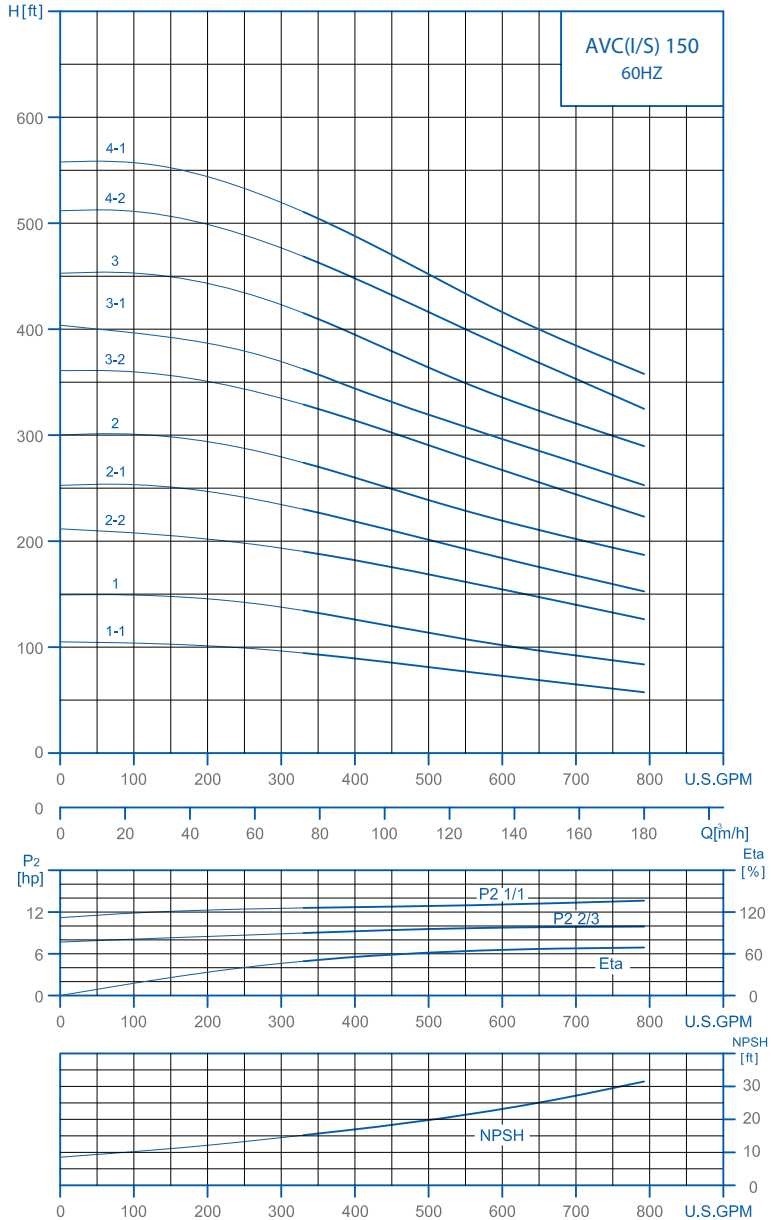

NEMA 60HZ
Vertical Multistage Centrifugal in-line Pumps

Dimensions & Weights AVC 150

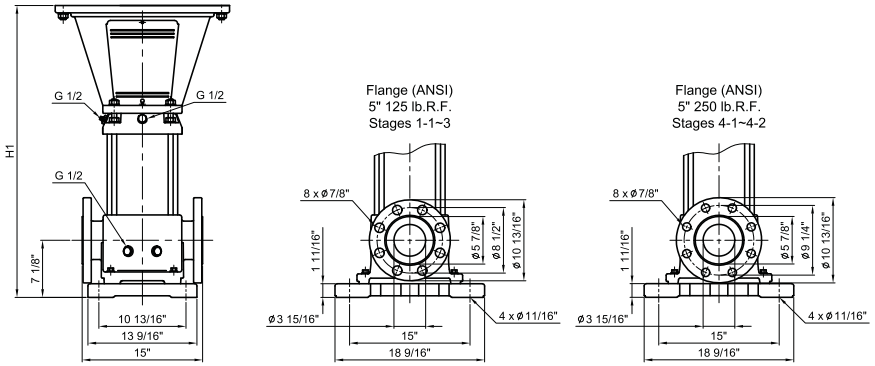

Pump type	Recommend motor of HP			AVC			
	P_2			NEMA Frame TEFC motors	NEMA Frame ODP motors	Dimension [inch]	Weights[lbs]
	[HP]	[kW]	[PH]			ANSI flange H1	ANSI flange
AVC 150-1-1	25	18.5	3	284TSC	284TSC	32.83	249.13
AVC 150-1	30	22	3	286TSC	284TSC	32.83	249.24
AVC 150-2-2	40	30	3	286TSC	286TSC	38.96	270.61
AVC 150-2-1	50	37	3	326TSC	324TSC	38.96	288.05
AVC 150-2	60	45	3	364TSC	324TSC	38.96	288.20
AVC 150-3-2	75	55	3	365TSC	364TSC	45.55	364.08
AVC 150-3-1	75	55	3	365TSC	364TSC	45.55	364.11
AVC 150-3	100	75	3	405TSC	365TSC	45.55	364.19
AVC 150-4-2	100	75	3	405TSC	365TSC	51.67	385.67
AVC 150-4-1	100	75	3	405TSC	365TSC	51.67	385.76

NEMA 60HZ
Vertical Multistage Centrifugal in-line Pumps

Dimensions & Weights AVI/S 150

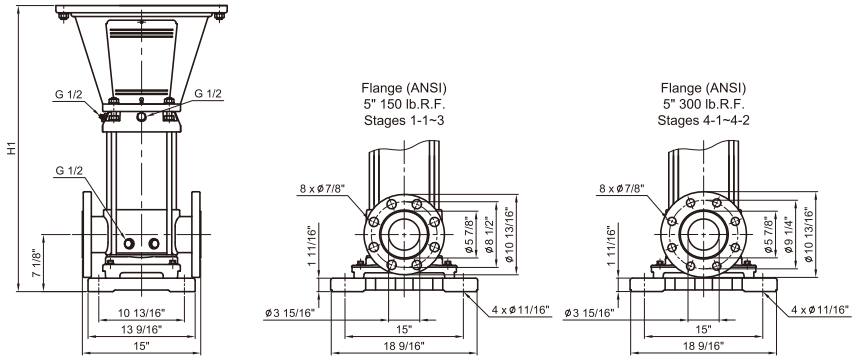

Pump type	Recommend motor of HP			AVI,AVS			
	P_2			NEMA Frame TEFC motors	NEMA Frame ODP motors	Dimension [inch]	Weights[lbs]
	[HP]	[kW]	[PH]			ANSI flange H1	ANSI flange
AVI,AVS 150-1-1	25	18.5	3	284TSC	284TSC	32.95	214.22
AVI,AVS 150-1	30	22	3	286TSC	284TSC	32.95	214.75
AVI,AVS 150-2-2	40	30	3	286TSC	286TSC	39.07	235.85
AVI,AVS 150-2-1	50	37	3	326TSC	324TSC	39.07	253.36
AVI,AVS 150-2	60	45	3	364TSC	324TSC	39.07	253.47
AVI,AVS 150-3-2	75	55	3	365TSC	364TSC	45.67	329.61
AVI,AVS 150-3-1	75	55	3	365TSC	364TSC	45.67	329.74
AVI,AVS 150-3	100	75	3	405TSC	365TSC	45.67	329.83
AVI,AVS 150-4-2	100	75	3	405TSC	365TSC	51.79	349.33
AVI,AVS 150-4-1	100	75	3	405TSC	365TSC	51.79	349.41

All technical information is subject to change without notice.

NEMA 60HZ
Vertical Multistage Centrifugal in-line Pumps

Note