MILANO

Stainless Steel end suction Centrifugal Pump

ISO 2858-DIN 24256 Standard

ISO 2858 PUMP
Bare Shaft

Supreme Motor Pump
Close Couple

Outstanding Features

Superior Hydraulic Design
Easy Dismantling
Stainless Steel Wet parts
Acid & Alkali Resisting

Designed for

Liquid Transfer
Water Supply
Building Service
Environment Engineering
Industrial Application
Vessel Seawater Circulation

Limitation

Flow: 150m^3/hr
Head: 120m max.
Pumped Liquid: -15℃ to +180℃
Operating Pressure: 16 bar max

ISO 9001:2000 SGS

MILANO

Stainless Steel Centrifugal Pump

APEC ISO Pump and Supreme Motor Pump are designed in accordance with ISO 2858- DIN 24256 Standard. All wet parts, including volute casing, shaft, impeller, are made of Stainless Steel for long time endurance, acid-alkali resisting, and rust free liquid transfer.

Applications

Water supply

Water supply & distribution; pressure boosting in waterworks and substations, sprinkler, drip and flood irrigation.

Industry

Water supply and circulation in cooling and heating systems. Pumping of cooling brine and cooling agents in equipment and mechanical engineering. Paper and sugar industries, iron and steel production, condensate transfer and boiler fill.

Washing and cleaning installations, water-curtain spray-paint bays, emptying and filling of tanks and reservoirs, pumping of seawater and brackish water, moistening in dedusting plants.

Building services

Circulation of liquids, heating and cooling water in central heating, ventilation and air-conditioning systems. Fire fighting service. Water circulation for swimming pools, general mechanical services.

Environment Engineering

Filter installations, water treatment systems, dedusting plants, recooling systems, and installations for soil sanitation and infiltration water treatment.

Vessels

Circulation of cooling system for fish catch, water supply and general mechanical service.

Pump Features

APEC ISO Pump and Supreme motor pump have superior hydraulic design and incorporate high technology manufacturing methods, which enable significantly higher efficiencies for less power consumption and minimum maintenance. All these features guarantee Prostain pump users continuing economy in all applications.

APEC ISO Pump and Supreme Pump are single stage, non self-priming, centrifugal volute pumps, conforming to ISO 2858 Standard.

Operating Conditions

Flow:	Max. 150 m^3
Head:	Max. 120 m.
Liquid Temperature:	-15℃ to+180℃
Operating Pressure:	max. 16 bar.

Designed for non-aggressive, non-explosive thin and clean liquids without solid particles or fibers.

International Standard

Conforming to ISO 2858 Standard means dimensional interchangeability with other makes of pumps, manufactured to the same international standard. **APEC** pumps exceed the ISO performance standard because of hydraulic design superiority. Due to the pump design, the backplate and impeller can be easily dismantled from the drive end without removing the volute casing from the pipework. As standard of Prostain ISO Pump, a support foot is fitted to the bearing housing.

Stainless Steel Centrifugal Pump

Standard Features

APEC pumps include taper mounted and keyed impeller for easy removal from shaft during servicing and positive locking during operation; heavy duty shaft with large capacity impeller and bearing for safe operation at high speed. As type 304 stainless steel volute for added safety; reusable O ring body seal; minimum number of parts for full range (only two shaft modules) reduces spare parts stocking; double curvature impeller vanes produce highly efficient suction performance. Type 316 stainless steel shaft; ductile iron shaft clamp; type 304 stainless steel volute with integral suction and discharge flanges and mounting feet; pressure rated to 1200 kPa (120 meter head); SS 304 impeller, backplate, and impeller nut; cast iron housing with sealed for life grease packed bearings; lip type shaft seals to protect bearings; single mechanical seal

Optional Features

Type 316 stainless steel impeller, volute, and backplate; optional mechanical seal; works certified and witnessed tests for guaranteed performance; flexible and spacer couplings; pulleys; pressed/ welded stainless steel or carbon steel baseplates.

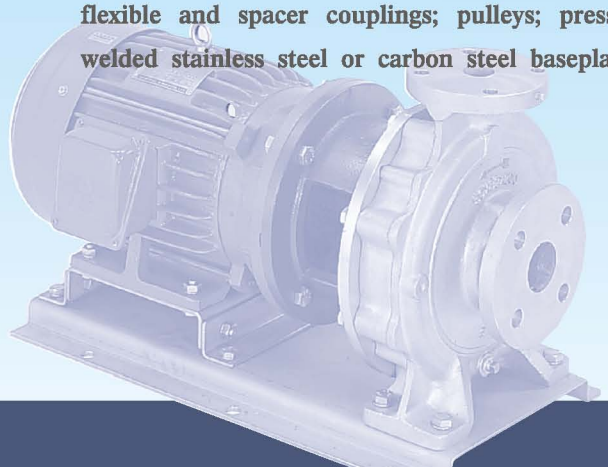

Motor

The **APEC** standard motor is a totally enclosed, fan-cooled squirrel-cage motor that dimensionally complies with IEC and DIN. The motor pump uses standard off the shelf foot mounted and flange electric motors which require no modification and are therefore no more difficulty to purchase than motors used on long coupled units. Foot mounted on the motor and on the pump body combine to provide exceptionally rigid mounting for the complete unit.

Enclosure Class: IP 54
Insulation Class: class F from 15 kw; Class B
Ambient Temperature: According to IEC
50 HZ Voltages: 3x220-240/380-415V
60 HZ Voltages: 3x200-230/380-460V

Optional Base Assembly

Baseplate Kit

A baseplate kit is available to allow on-site basing up of pump and motor, sizes to suit all models and motors.

The kit includes baseplate, flexile or spacer coupling, coupling guard, all fasteners and shims required for on-site alignment.

Couplings

Flexible and spacer coupling:
A coupling with spacer enables dismantling of the complete discharge cover including shaft seal and impeller without removing the motor or pump body from the baseplate.

Maximum Operating Temperature

Maximum pumped liquid temperature for the standard ISO Line pump is 80℃ using standard seals. Liquids up to 180℃ can be handled using special seals.

Pump Selection Chart

50Hz 2/4 Poles Motor

1450 R.P.M (Nominal Speed)

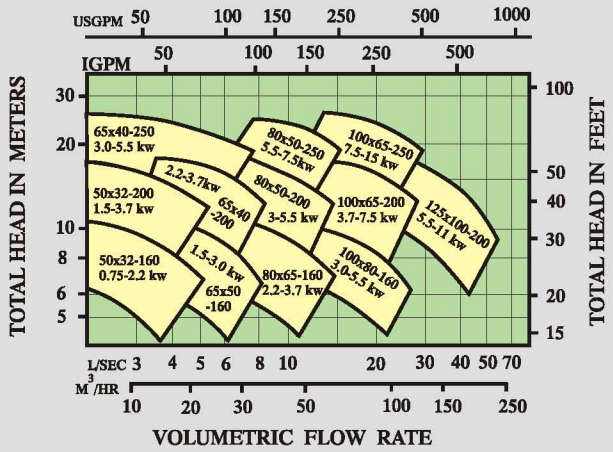

2900 R.P.M (Nominal Speed)

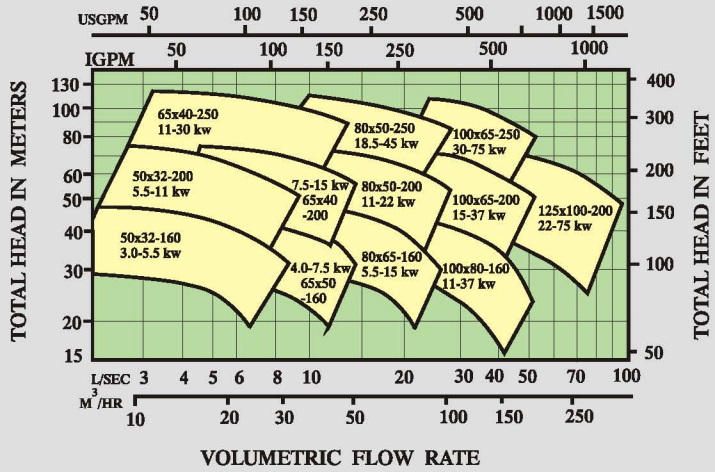

Data for clean, cold water only.

60Hz 2/4 Poles Motor

1750 R.P.M (Nominal Speed)

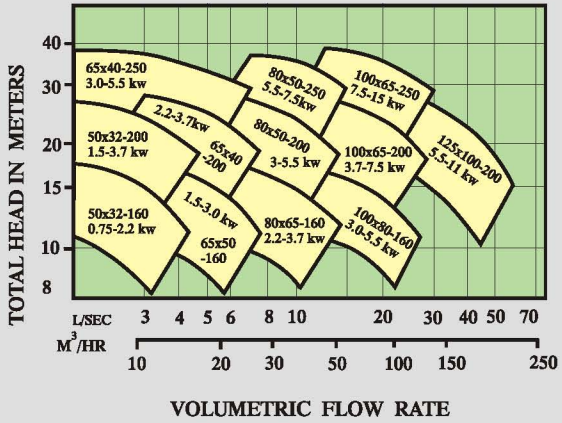

3500 R.P.M (Nominal Speed)

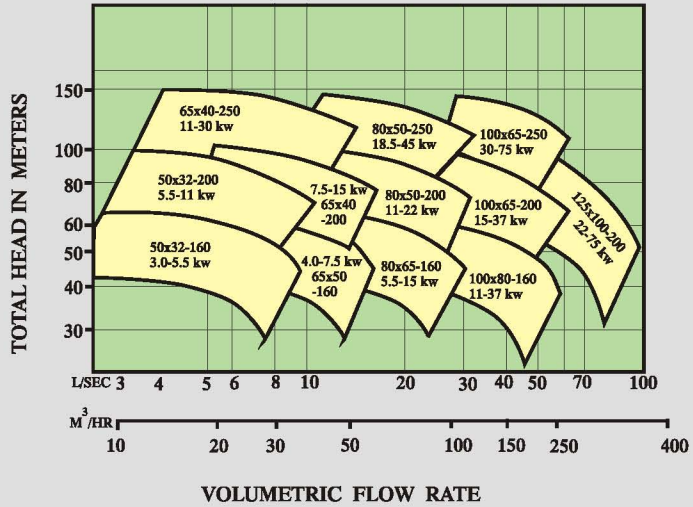

Data for clean, cold water only.

Stainless Steel Centrifugal Pump

ISO 2858 Standard Pump (Bare-Shaft)

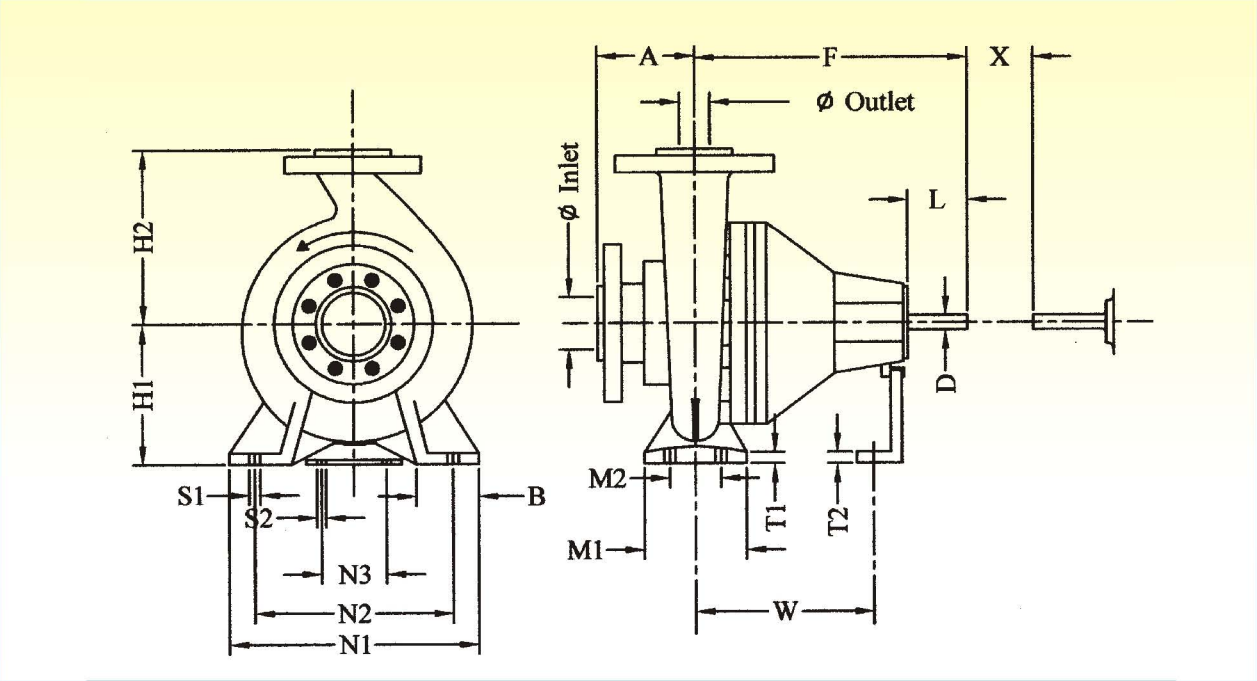

PUMP SIZE			SHAFT	PUMP DIMENSIONS				MOUNTING DIMENSIONS									BOLT HOLES		SHAFT END		GAP	WEIGHT
IN	OUT	IMP	NO.	A	F	H1	H2	B	M1	M2	N1	N2	N3	T1	T2	W	S1	S2	D	L	X	kg
50	32	160	1	80	385	132	160	50	100	70	240	190	110	10	4	285	M12	M12	24	50	100	38
50	32	200	1	80	385	160	180	50	100	70	240	190	110	10	4	285	M12	M12	24	50	100	44
65	50	160	1	80	385	132	160	50	100	70	240	190	110	10	4	285	M12	M12	24	50	100	39
65	40	200	1	100	385	160	180	50	100	70	265	212	110	10	4	285	M12	M12	24	50	100	46
65	40	250	2	100	500	180	225	65	125	95	320	250	110	12	5	370	M12	M12	32	80	100	65
80	65	160	1	100	385	160	180	50	100	70	265	212	110	10	4	285	M12	M12	24	50	100	44
80	50	200	1	100	385	160	200	50	100	70	265	212	110	10	4	285	M12	M12	24	50	100	48
80	50	250	2	125	500	180	225	65	125	95	320	250	110	12	5	370	M12	M12	32	80	100	70
100	80	160	2	100	500	160	200	65	125	95	280	212	110	12	5	370	M12	M12	32	80	100	62
100	65	200	2	100	500	180	225	65	125	95	320	250	110	12	5	370	M12	M12	32	80	140	66
100	65	250	2	125	500	200	225	80	160	120	360	280	110	12	5	370	M16	M12	32	80	140	78
125	100	200	2	125	500	200	280	80	160	120	360	280	110	13	5	370	M16	M12	32	80	140	81

*Specifications subject to change without prior notice.

Supreme Motor Pump (Close Couple)

"160", "200" and "250" series pump with T.E.F.C. Motors

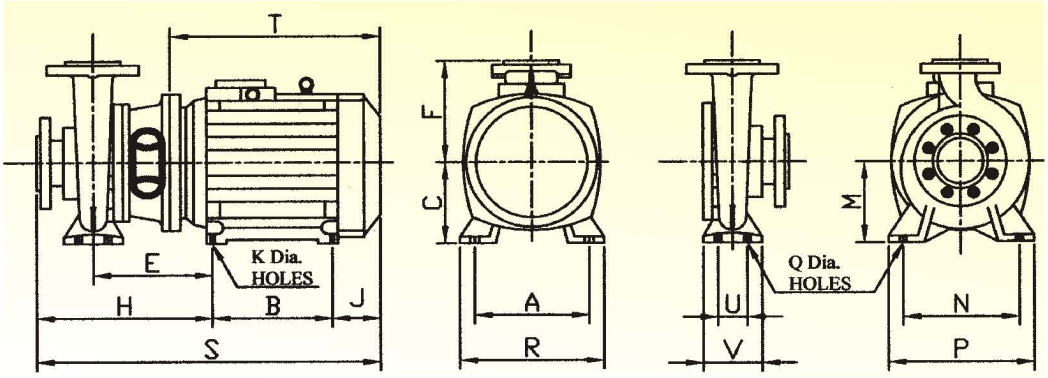

2900/3500 rpm (Nominal speed)

PUMP SIZE	kw	MOTOR FRAME	A	B	C	E	F	H	J	K	M	N	P	Q	R	S	T	U	V
50x32-160	3.0	90L	140	125	90	274	160	354	102	10	132	190	240	14	170	581	322	70	100
65x50-160	4.0	112M	190	140	112	298	160	378	122	12	132	190	240	14	224	640	371	70	100
80x65-160	5.5	132S	216	140	132	298	180	398	145	12	160	212	265	14	250	683	374	70	100
100x80-160	11	160M	254	210	160	355	200	455	180	15	160	212	280	14	300	845	498	95	125
50x32-200	5.5	132S	216	140	132	298	180	378	145	12	160	190	240	14	250	663	374	70	100
65x40-200	7.5	132S	216	140	132	298	180	398	145	12	160	212	265	14	250	683	374	70	100
80x50-200	11	160M	254	210	160	347	200	447	180	15	160	212	265	14	300	837	498	70	100
100x65-200	15	160M	254	210	160	355	225	455	180	15	180	250	320	14	300	845	498	95	125
125x100-200	22	180M	279	241	180	368	280	493	200	15	200	280	360	18	355	934	562	120	160
65x40-250	11	160M	254	210	160	355	225	455	180	15	180	250	320	14	300	845	498	95	125
80x50-250	18.5	160L	254	254	160	355	225	480	180	15	180	250	320	14	300	914	542	95	125
100x65-250	30	180L	279	279	180	368	250	493	200	15	200	280	360	18	355	972	600	120	160

1450/1750 rpm (Nominal speed)

PUMP SIZE	kw	MOTOR FRAME	A	B	C	E	F	H	J	K	M	N	P	Q	R	S	T	U	V
50x32-160	2.2	100L	160	140	100	252	160	332	112	12	132	190	240	14	195	584	315	70	100
65x50-160	3.0	100L	160	140	100	252	160	332	112	12	132	190	240	14	195	584	315	70	100
80x65-160	3.7	112M	190	140	112	298	180	398	122	12	160	212	265	14	224	660	371	70	100
100x80-160	5.5	132S	216	140	132	306	200	406	145	12	160	212	280	14	250	690	374	95	125
50x32-200	3.7	112M	190	140	112	298	180	378	122	12	160	190	240	14	224	640	371	70	100
65x40-200	3.7	112M	190	140	112	298	180	398	122	12	160	212	265	14	224	660	371	70	100
80x50-200	5.5	132S	216	140	132	298	200	398	145	12	160	212	265	14	250	683	374	70	100
100x65-200	7.5	132M	216	178	132	306	225	406	145	12	180	250	320	14	250	729	412	95	125
125x100-200	11	160M	254	210	160	355	280	480	180	15	200	280	360	18	300	870	498	120	160
65x40-250	5.5	132S	216	140	132	306	225	406	145	12	180	250	320	14	250	691	374	95	125
80x50-250	7.5	132M	216	178	132	306	225	431	145	12	180	250	320	14	250	751	412	95	125
100x65-250	15	160L	254	254	160	355	250	480	180	15	200	280	360	18	300	914	542	120	160

*Specifications subject to change without prior notice.
*Other size of motors available upon customer request.

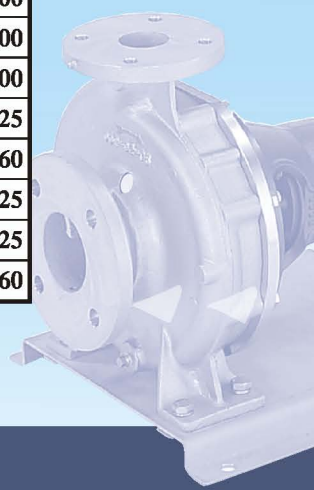

ISO 2858-DIN 24256 Standard

SupremeMotor Pump

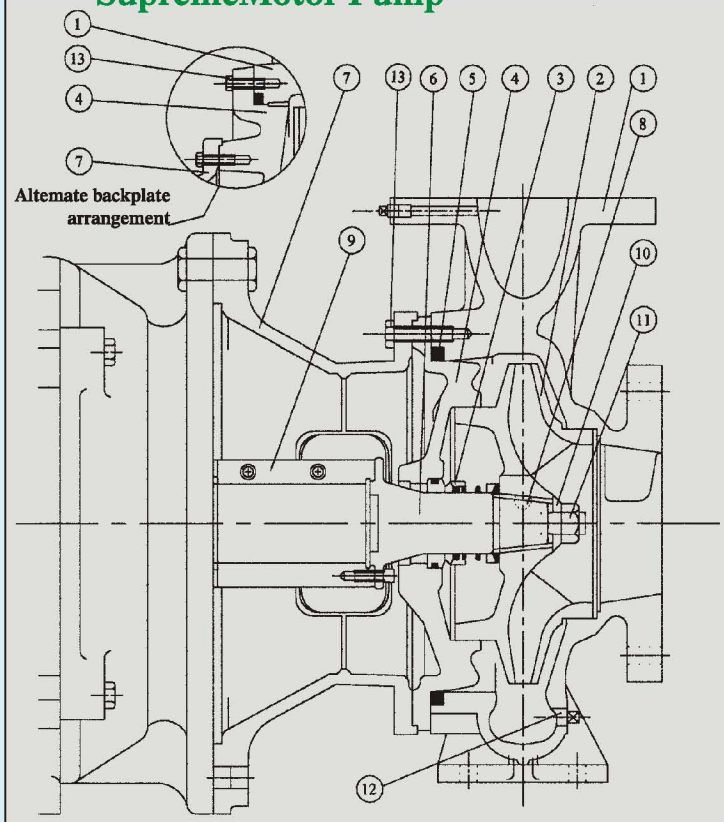

Item No.	Description	Item No.	Description
1	Volute Casing	8	Impeller Key
2	Impeller	9	Shaft Clamp
3	Mechanical Seal	10	Impeller Washer
4	Backplate	11	Impeller Nut
5	"O" Ring	12	Casing Plug
6	Shaft Extension	13	Bell Housing to (Backplate)
7	Bell Housing		Volute Casing Bolt-M10

ISO 2858 Standard

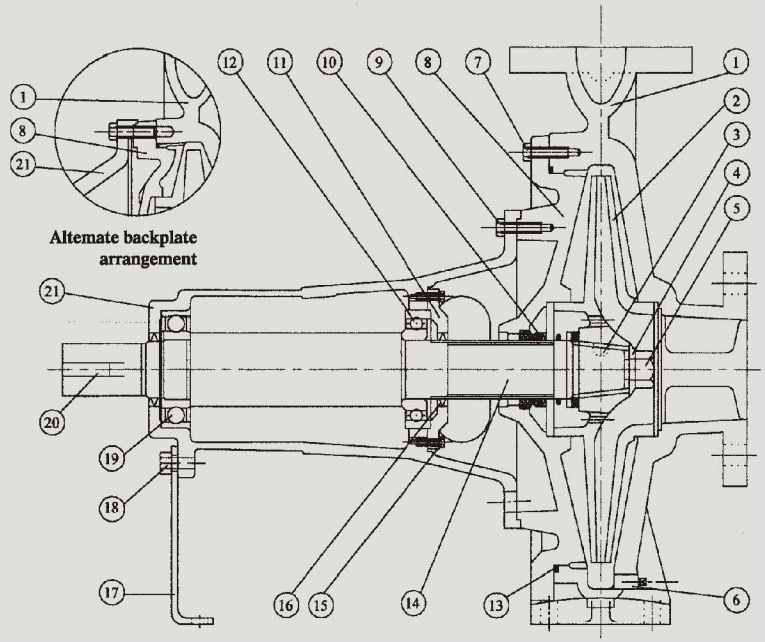

Item No.	Description	Item No.	Description
1	Volute Casing	13	"O" Ring
2	Impeller	14	Shaft
3	Impeller Key	15	Bearing Cover to Bearing Housing Bolt
4	Impeller Washer		
5	Impeller Nut	16	Dust Seal
6	Casing Plug	17	Support Foot
7	Backplate to Volute Casing Bolt	18	Support Foot to Bearing Housing Bolt
8	Backplate		
9	Bearing Housing to Backplate Bolt	19	Bearing
		20	Pulley Key
10	Mechanical Seal	21	Bearing Housing
11	Bearing Cover		
12	Bearing		